LOT 491

LEGEND	
	POWER DOME
	POWER POLE
	PHONE PITS
	WATER CONN.
TP=10.00	TOP PILLAR/POST
TW=10.00	TOP WALL
TR=10.00	TOP RETAINING
TF=10.00	TOP FENCE

⚠ DISCLAIMER:
Lot boundaries drawn on survey are based on landgate plan only. Survey does not include title search and as such may not show easements or other interests not shown on plan. Title should be checked to verify all lot details and for any easements or other interests which may affect building on the property.

⚠ DISCLAIMER:
Survey does not include verification of cadastral boundaries. All features and levels shown are based on orientation to existing pegs and fences only which may not be on correct cadastral alignment. Any designs based or dependent on the location of existing features should have those features' location verified in relation to the true boundary.

⚠ DISCLAIMER:
Survey shows visible features only and will not show locations of underground pipes or conduits for internal or mains services. Verification of the location of all internal and mains services should be confirmed prior to finalisation of any design work.

⚠ DISCLAIMER:
Cottage & Engineering surveys accept no responsibility for any physical on site changes to the parcel or portion of the parcel of land shown on this survey including any adjoining neighbours levels and features that have occurred after the date on this survey. All Sewer details plotted from information supplied by Water Corporation.

⚠ NOTE:
HIGH TENSION POWER LINES.
CHECK TITLE FOR EASEMENTS
AND WESTERN POWER
FOR SET-BACKS.

CITY OF FREMANTLE
These Revised Plans Form Part of

DA0168/25

14 August 2025

The City of Fremantle advises that the inspection of these plans and any other document relevant to this application for planning approval by a member of the public is provided for the sole purpose of enabling consideration as part of the approval process under the town planning scheme. Photographing, sketching or other copying of this information is prohibited and copyright owners are entitled to take legal action against any person who infringes their copyright.

KOOMBANA BAY

E & OE

TYPE: 26 BRICK

LUXE SPECIFICATION

© COPYRIGHT

MODEL N° KO02

REV	VO #	DRN	DATE	CHK
		RX-JX	21/05/2025	HBH
01	CERTS, PPAV	RX-ED	03/07/2025	HBH
02	PCV 04	HBH	30/07/2025	HBH
03	PCV 05	HBH	12/08/2025	HBH

Sub-contractors to verify all dimensions on site.

WORKING DRAWINGS

THIS IS ONE OF THE DRAWINGS REFERRED TO IN THE CONTRACT.

DATED:...../...../.....

OWNER ..... WITNESS .....

OWNER ..... WITNESS .....

BUILDER ..... WITNESS .....

SHEET N° 1 OF 9 + 5 ANC

JOB N° 311009

REVISION 03 | DATE 12/08/2025

Plunkett Homes

129 Hasler Road,
Osborne Park, W.A. 6017

PO Box 55, Westfield Shopping Centre, Innaloo, W.A. 6918.

Ph 08 9366 0000.

Fx 08 9258 4066.

www.plunkettthomes.com.au

Reg. Builder N°: 7995.
A.B.N. 98 009 250 373.

! WARNING !
PLAN NOT YET APPROVED BY TITLES OFFICE.
VERIFY LOT DIMENSIONS & ANGLES WITH TITLE.

CONTOUR & FEATURE SURVEY

LOT	Lot 491 (Plan 11594)
ADDRESS	#66 Mccombe Avenue, Samson
LGA	CITY OF FREMANTLE
ORDER #	311009
GPS	Lat: -32.073703 Long: 115.799145
SSA No	AREA 757m² VOL. 1440 FOL. 252

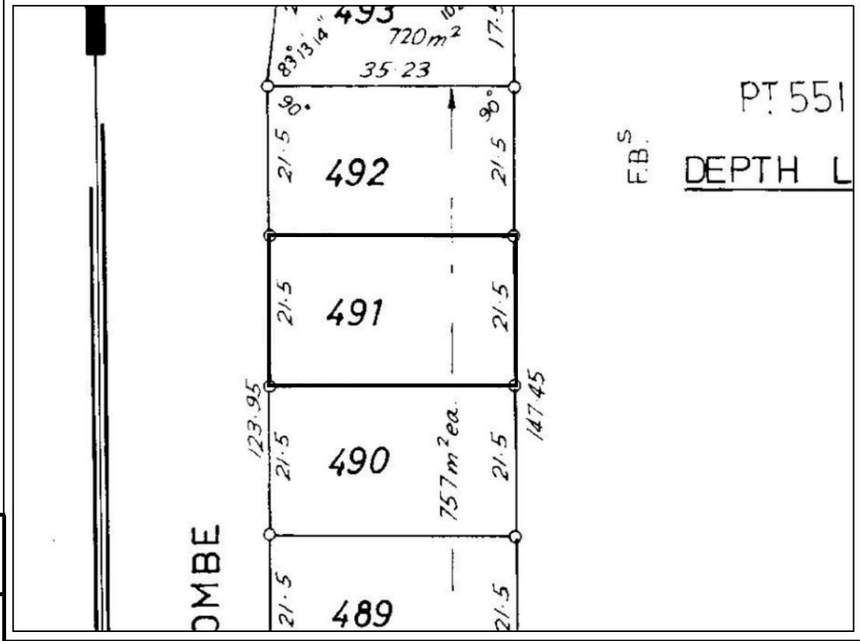

ELEC.	O/Head	SEWER	Yes	ROADS	Bitumen	COASTAL	No (Approx. Only - Confirm With Shire)
GAS	Check Alinta	COMMS	Yes	PATH	Brick	SOIL	Sand
WATER	Yes	DRAINAGE	Good	KERBS	Non-Mount / Nil	VEG.	High Grass Cover

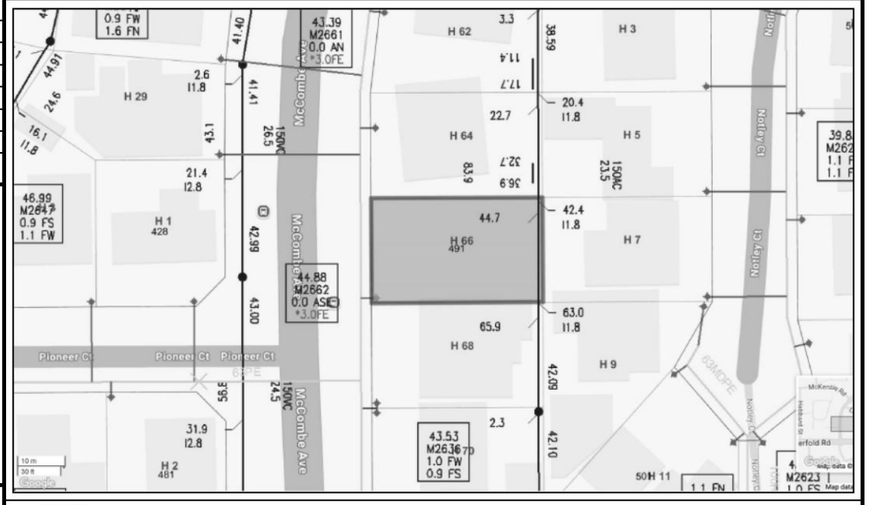

COTTAGE SURVEYS
LICENSED SURVEYORS

CITY OF FREMANTLE
These Revised Plans Form Part of

DA0168/25

14 August 2025

LEGEND	
	POWER DOME
	POWER POLE
	PHONE PITS
	WATER CONN.
TP=10.00	TOP PILLAR/POST
TW=10.00	TOP WALL
TR=10.00	TOP RETAINING
TF=10.00	TOP FENCE

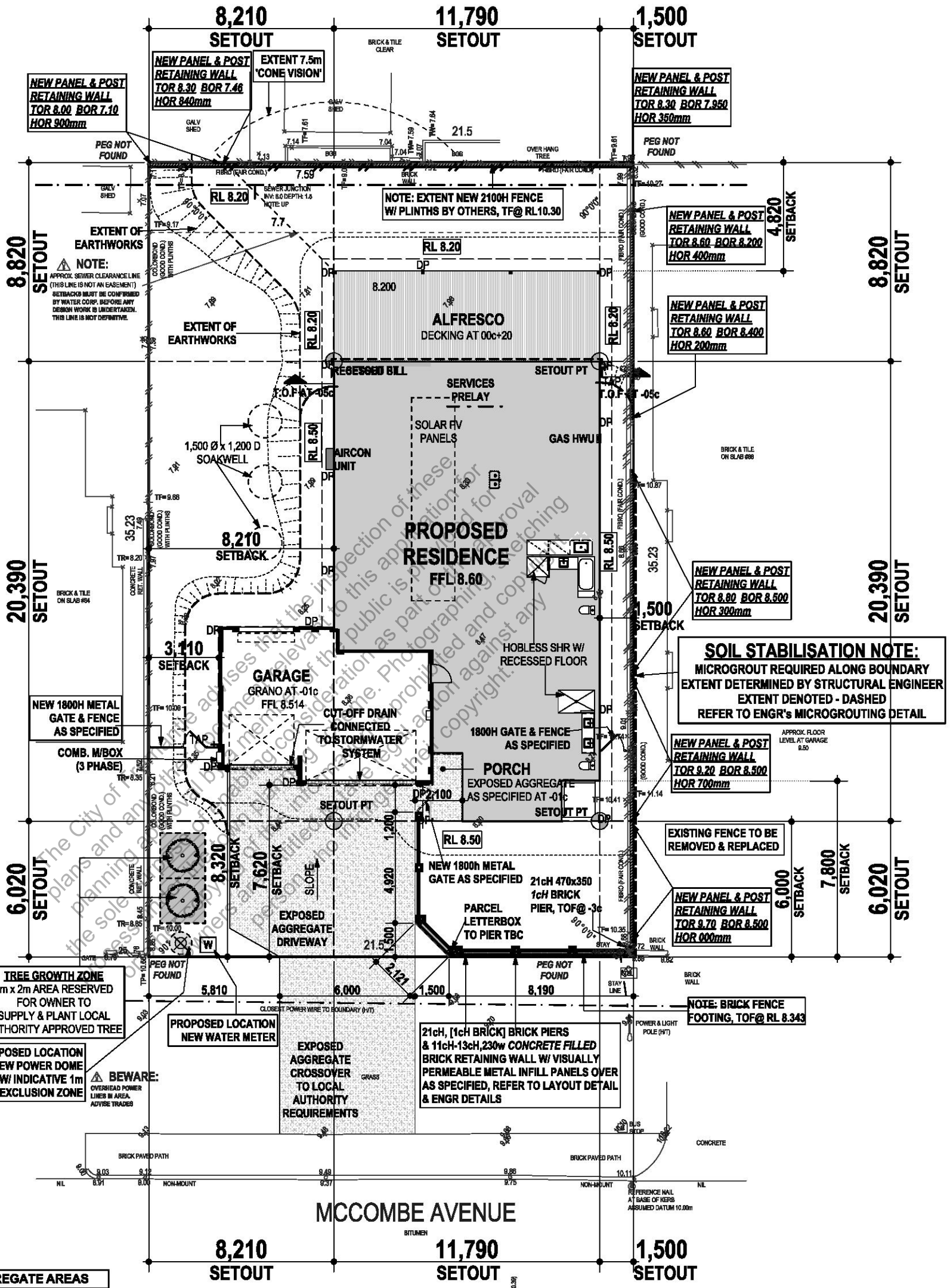

The City of Fremantle advises that the inspection of these plans and any other documents relevant to this application for planning approval by the members of the public is permitted for the sole purpose of enabling consideration as part of the application process. Photographing, sketching or otherwise copying the plans is not permitted and copyright owners are entitled to take legal action against any person who infringes their copyright.

KOOMBANA BAY

E & OE

TYPE: 2c BRICK

LUXE SPECIFICATION	MODEL N°
© COPYRIGHT	KO02 A3

REV	VO #	DRN	DATE	CHK
01	CERTS, PPAV	RX-JX	21/05/2025	HBH
02	PCV 04	HBH	30/07/2025	HBH
03	PCV 05	HBH	12/08/2025	HBH

Sub-contractors to verify all dimensions on site.

WORKING DRAWINGS

THIS IS ONE OF THE DRAWINGS REFERRED TO IN THE CONTRACT.

DATED:...../...../.....

OWNER ..... WITNESS .....

OWNER ..... WITNESS .....

BUILDER ..... WITNESS .....

SHEET N° 2 OF 9 + 5 ANC

JOB N° 311009

REVISION 03 DATE 12/08/2025

STORMWATER REQUIREMENTS

- ROOF AREA (343.82m²)
- 343.83m² x RAINFALL (0.015)
- **TOTAL TO CONTAIN = 5.157m³**
- 1500Ø x 1200D SOAKWELL@ 2.10m³x3NO.
- **TOTAL SOAKWELL CAPACITY = 6.30m³**

ZONED R15

(MIN OPEN SPACE REQ'D = 50%)
HOUSE AREA (261.52m²) / LOT AREA (757m²)
- SITE COVER = 34.54%
- OPEN SPACE PROVIDED = 65.46%

GRANOWORKER NOTE:

- DROP FOOTINGS TO PORCH & ALFRESCO POSTS TOP AT -3c, UNLESS NOTED OTHERWISE.

NOTE:

- EARTHWORKS TO BE CARRIED OUT BY BUILDER.
- ALL STORMWATER DISPOSAL TO SOAKWELLS TO LOCAL SHIRE REQUIREMENTS BY BUILDER.
- LOCATION OF DOWNPIPES IS INDICATIVE ONLY & MAY BE CHANGED AT BUILDERS DISCRETION.
- DO NOT SCALE FROM DRAWINGS.
- PLANS TO BE READ IN CONJUNCTION WITH ADDENDA AND WORK ORDER. NOTIFY BUILDER OF ANY DISCREPANCIES PRIOR TO COMMENCING WORK.

LOT MISCLOSE

0.000 m

⚠ DISCLAIMER:
Lot boundaries drawn on survey are based on landgate plan only. Survey does not include title search and as such may not show easements or other interests not shown on plan. Title should be checked to verify all lot details and for any easements or other interests which may affect building on the property.

⚠ DISCLAIMER:
Survey does not include verification of cadastral boundaries. All features and levels shown are based on orientation to existing pegs and fences only which may not be on correct cadastral alignment. Any designs based or dependent on the location of existing features should have those features' location verified in relation to the true boundary.

⚠ DISCLAIMER:
Survey shows visible features only and will not show locations of underground pipes or conduits for internal or mains services. Verification of the location of all internal and mains services should be confirmed prior to finalisation of any design work.

⚠ DISCLAIMER:
Cottage & Engineering surveys accept no responsibility for any physical on site changes to the parcel or portion of the parcel of land shown on this survey including any adjoining neighbours levels and features that have occurred after the date on this survey. All Sewer details plotted from information supplied by Water Corporation.

SITE AGGREGATE AREAS	
LOCATION	AREA
DRIVEWAY, PATH	65.69
CROSSOVER	47.20
PORCH	4.09
	116.98 m²

SITE PLAN

1:200

PLUMBER NOTE:
- PROVIDE REFLUX VALVE TO SEWER LINE.

BOUNDARY FENCING NOTE:
- WHERE REQUIRED, OWNER TO LIASE WITH NEIGHBOUR IN REGARDS TO THE REMOVAL AND REINSTATEMENT OF EXISTING BOUNDARY FENCING TO BUILDERS PROGRAMME.

⚠ NOTE:
HIGH TENSION POWER LINES. CHECK TITLE FOR EASEMENTS AND WESTERN POWER FOR SET-BACKS.

⚠ BEWARE: POSSIBLE SERVICE RUN IN & COST

Scale 1:200
0 2 4 6 8

COTTAGE SURVEYS
LICENSED SURVEYORS

JOB #	601973	GPS	Lat: -32.073703 Long: 115.799145	ROADS	Bitumen	ELEC.	O/Head
		ORDER #	311009	KERBS	Non-Mount / Nil	COMMS.	Yes
ADDRESS	#66 Mccombe Avenue	LOT	Lot 491 (Plan 11594)	FOOTPATH	Brick	WATER	Yes
SUBURB	Samson			SOIL	Sand	GAS	Check Alinta
LGA	CITY OF FREMANTLE	AREA	757m² VOL. 1440 FOL. 252	DRAINAGE	Good	SEWER	Yes
DRAWN	E. Sebuc	DATE	28 Feb 25 SSA No	VEGETATION	High Grass Cover	COASTAL	No (Approximate Only Confirm With Shire)

OWNER NOTE:

- DUE TO ONGOING CHANGES TO STATUTORY REQUIREMENTS AND BUILDING METHODS, SOME ASPECTS OF THIS BUILDING MAY BE AT VARIANCE TO THE ORIGINAL DISPLAY VERSION (IF APPLICABLE).
- WHERE PRELIMINARY DRAWINGS ARE PROVIDED BY THE OWNER OR THE OWNER'S AGENT, THE BUILDER RESERVES THE RIGHT TO MODIFY THE OWNERS DRAWINGS TO SUIT THE BUILDER'S CURRENT CONSTRUCTION METHOD.

FIXING CARPENTER NOTE:

- PROVIDE SHELF & RAIL AT 1650 AFL TO ALL ROBES NOTED S & R.
- PROVIDE 4 SHELVES TO LINEN & PTY WHERE NOTED 4 x SH. TOP SHELF AT 1650. BOTTOM SHELF AT 450 WITH 400 SPACING TO REMAINDER OF SHELVING.
- PROVIDE SHELF SUPPORT WHEN SPAN EXCEEDS 1800mm U.N.O.
- PROVIDE 20mm GAP UNDER DOORS TO ROOMS WITH CEILING EXHAUST FANS FITTED WITH RUN-TON TIMER IN ACCORDANCE WITH NCC REQUIREMENTS.

SUPERVISOR / TRADES NOTE:

- REFER TO ENGINEERS DRAWINGS FOR SIZES & LOCATIONS OF ALL STRUCTURAL COLUMNS, PWP's AND BEAMS.

WIND CLASSIFICATION AS PER A.S. 4055:
N1 - FOR GROUND STOREY OF RESIDENCE

DURABILITY CLASS AS PER A.S. 3700:
R3 - COASTAL CONDITIONS APPLY

CITY OF FREMANTLE
These Revised Plans Form Part of
DA0168/25
14 August 2025

CEILING NOTE:

- CEILINGS AT 31c + PLATE UNLESS NOTED OTHERWISE.
- CEILINGS AT 2080mm AFL TO ALL ROBES & LINENS EXCLUDING WALK IN & WITH SLIDING DOORS UNLESS OTHERWISE NOTED.

Floor Areas

Floor	Location	Area	Perimeter
GROUND FLOOR			
	HOUSE	200.85	64.40
	GARAGE	58.84	32.96
	ALFRESCO	47.16	31.58
	PORCH	4.09	8.82
		310.94 m²	

Roof Areas

Floor	Pitch	Flat	Pitched
GROUND FLOOR			
	15.39°	17.99	18.66
	24.72°	325.53	358.38
		343.52 m²	377.04 m²

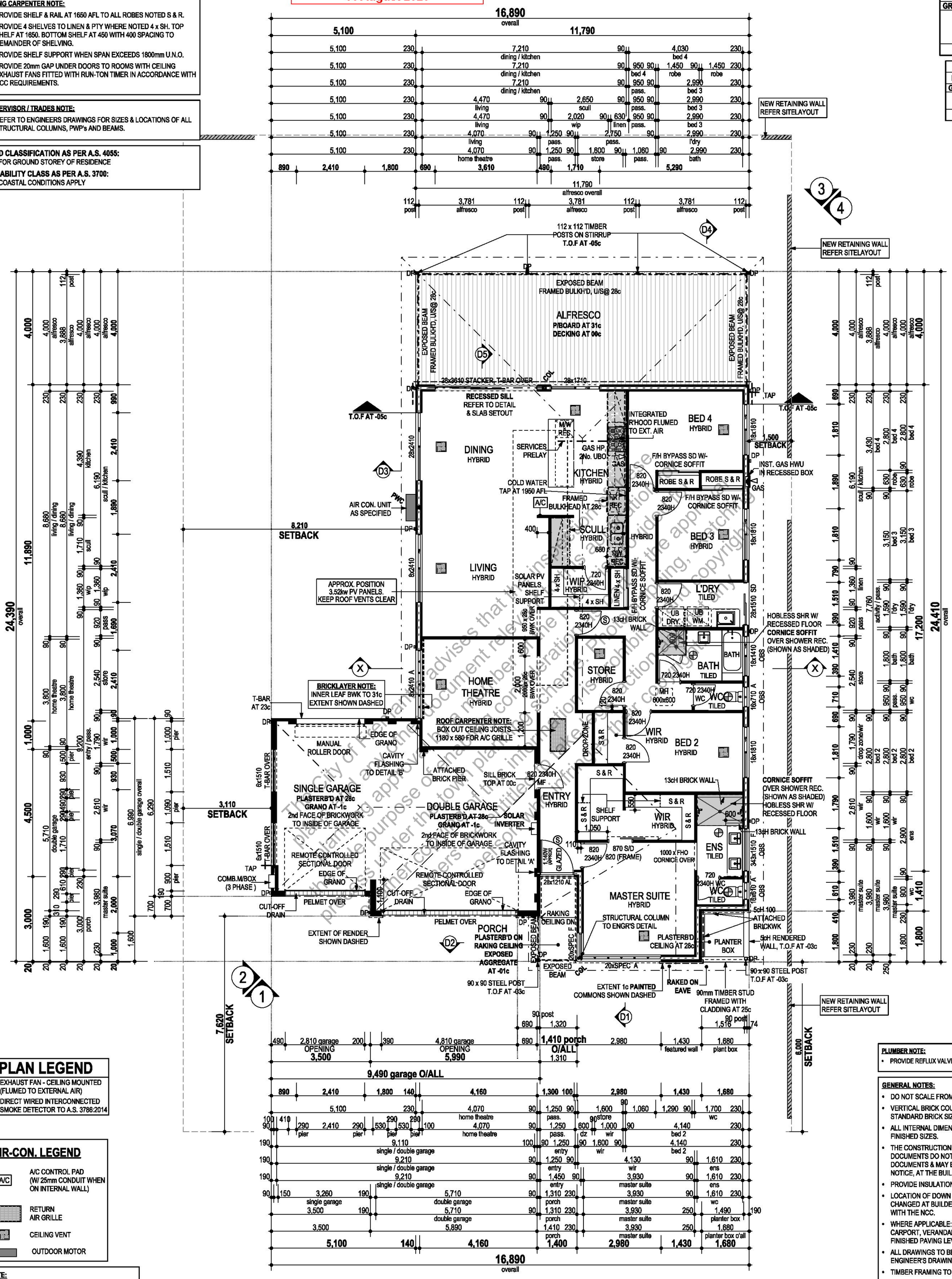

BRICKLAYER NOTE:
CAVITY INSULATION THROUGHOUT
DENOTES EXTENT OF CAVITY INSULATION ABOVE AND BELOW OPENINGS INCLUSIVE

PLUMBER NOTE:

- PROVIDE REFLUX VALVE TO SEWER LINE.

GENERAL NOTES:

- DO NOT SCALE FROM DRAWINGS.
- VERTICAL BRICK COURSING HEIGHTS ARE RELATED TO STANDARD BRICK SIZES.
- ALL INTERNAL DIMENSIONS ARE TO BRICK SIZES, NOT FINISHED SIZES.
- THE CONSTRUCTION DETAILS REFERRED TO IN THESE DOCUMENTS DO NOT FORM PART OF THE CONTRACT DOCUMENTS & MAY BE CHANGED AT ANY TIME WITHOUT NOTICE, AT THE BUILDER'S DISCRETION.
- PROVIDE INSULATION TO HOUSE CEILINGS AS PER ADDENDA.
- LOCATION OF DOWN PIPES IS INDICATIVE ONLY & MAY BE CHANGED AT BUILDERS DISCRETION AND MUST COMPLY WITH THE NCC.
- WHERE APPLICABLE: TOP OF FOOTINGS FOR PIER/POSTS TO CARPORT, VERANDAH & PORCH ARE TO BE 2c BELOW FINISHED PAVING LEVEL UNLESS NOTED OTHERWISE.
- ALL DRAWINGS TO BE READ IN CONJUNCTION WITH ENGINEER'S DRAWINGS.
- TIMBER FRAMING TO A.S. 1684
- 'WC' DENOTES LIFT-OFF HINGES.
- PROVIDE CORNER BEADS INTERNALLY TO ALL EXTERNAL CORNERS EXCLUDING DOOR & WINDOW REVEALS.
- AS PER WESTERN AUSTRALIAN BUILDING COMMISSION AND PLUMBING LEGISLATION ADOPTING THE NCC, FLOOR WASTES HAVE BEEN EXCLUDED TO WET AREAS, EXCLUDING SHOWER RECESSES

PLAN LEGEND

- EXHAUST FAN - CEILING MOUNTED (FLUMED TO EXTERNAL AIR)
- DIRECT WIRED INTERCONNECTED SMOKE DETECTOR TO A.S. 3786:2014

AIR-CON. LEGEND

- A/C — A/C CONTROL PAD (W/ 25mm CONDUIT WHEN ON INTERNAL WALL)
- RETURN AIR GRILLE
- CEILING VENT
- OUTDOOR MOTOR

NOTE:

- PROVIDE DUCTED REVERSE CYCLE AIR-CON SYSTEM. REFER MANUFACTURERS LAYOUT.

FLOOR PLAN

1:100

REV	VO #	DRN	DATE	CHK
01	CERTS, PPAV	RX-JX	21/05/2025	HBH
02	PCV 04	RX-ED	03/07/2025	HBH
03	PCV 05	HBH	12/08/2025	HBH

Sub-contractors to verify all dimensions on site.

WORKING DRAWINGS
THIS IS ONE OF THE DRAWINGS REFERRED TO IN THE CONTRACT.

DATED:...../...../.....

OWNER ..... WITNESS .....
OWNER ..... WITNESS .....
BUILDER ..... WITNESS .....

ADDRESS:
LOT 491
McCOMBE AVENUE
SAMSON

KOOMBANA BAY E & OE
TYPE: 2c BRICK
REVISION 03
MODEL N° KO02 LUXE SPECIFICATION A2
DATE 12/08/2025
© COPYRIGHT
SHEET N° 3 OF 9 + 5 ANC
JOB N° 311009

CEILING NOTE:

- CEILINGS AT 31c + PLATE UNLESS NOTED OTHERWISE.

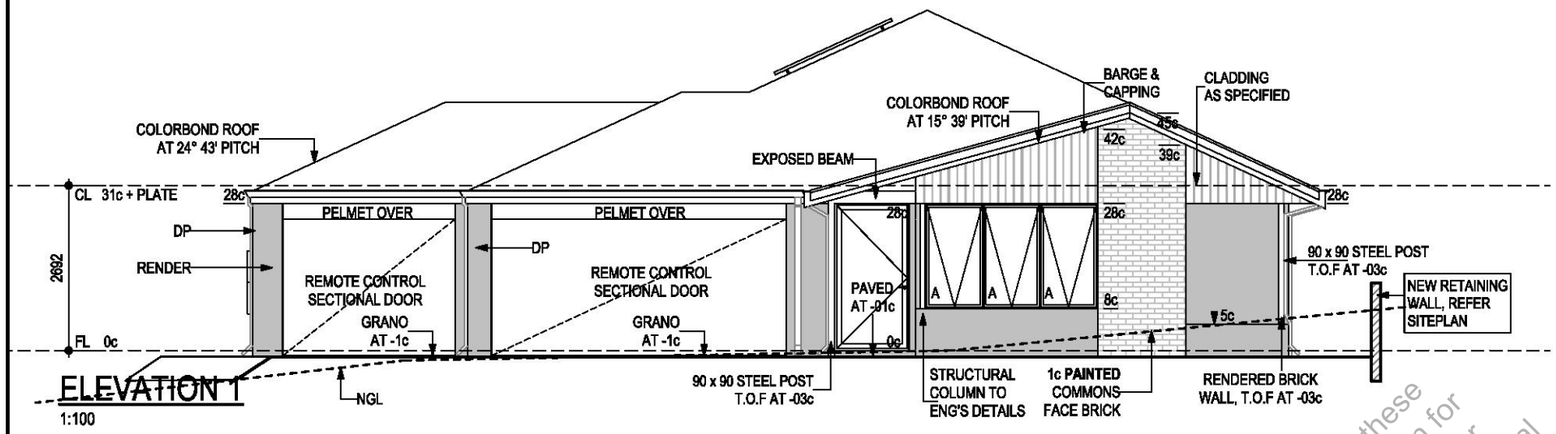

ELEVATION 1
1:100

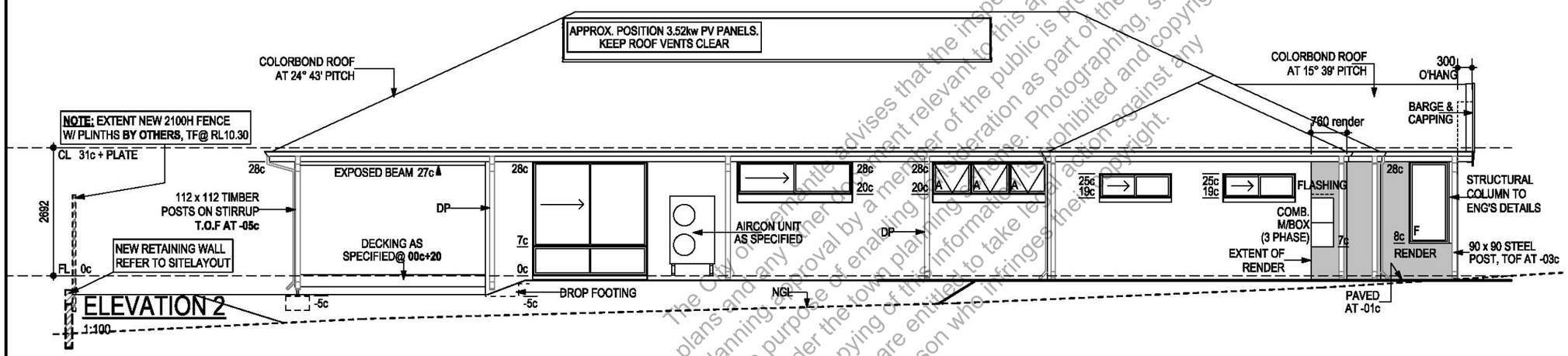

ELEVATION 2
1:100

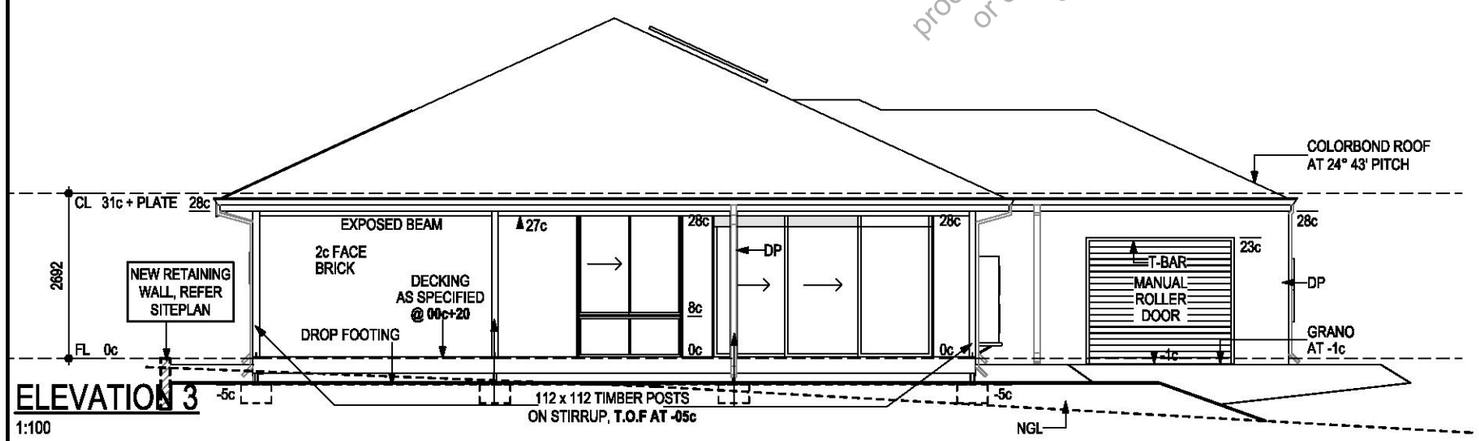

ELEVATION 3
1:100

The City of Fremantle advises that the inspection of these plans and any other document relevant to this application for planning approval by a member of the public is provided for the sole purpose of enabling consideration as part of the approval process under the town planning scheme. Photographing, sketching or other copying of this information is prohibited and copyright owners are entitled to take legal action against any person who infringes their copyright.

CITY OF FREMANTLE
These Revised Plans Form Part of

DA0168/25

14 August 2025

KOOMBANA BAY

E & OE

TYPE: 2c BRICK

LUXE SPECIFICATION

MODEL N° A3

© COPYRIGHT

KO02

REV	VO #	DRN	DATE	CHK
		RX-JX	21/05/2025	HBH
01	CERTS, PPAV	RX-ED	03/07/2025	HBH
02	PCV 04	HBH	30/07/2025	HBH
03	PCV 05	HBH	12/08/2025	HBH

Sub-contractors to verify all dimensions on site.

WORKING DRAWINGS

THIS IS ONE OF THE DRAWINGS REFERRED TO IN THE CONTRACT.

DATED:...../...../.....

OWNER WITNESS

OWNER WITNESS

BUILDER WITNESS

ADDRESS:

LOT 491
McCOMBE AVENUE
SAMSON

SHEET N° 4 OF 9 + 5 ANC

JOB N° 311009

REVISION 03

DATE 12/08/2025

CEILING NOTE:

- CEILINGS AT 31c + PLATE UNLESS NOTED OTHERWISE.

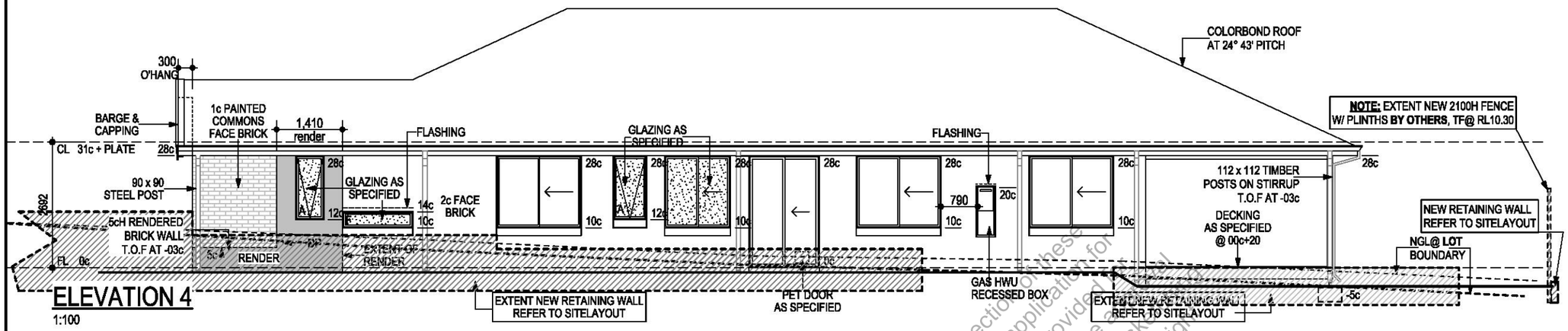

ELEVATION 4

1:100

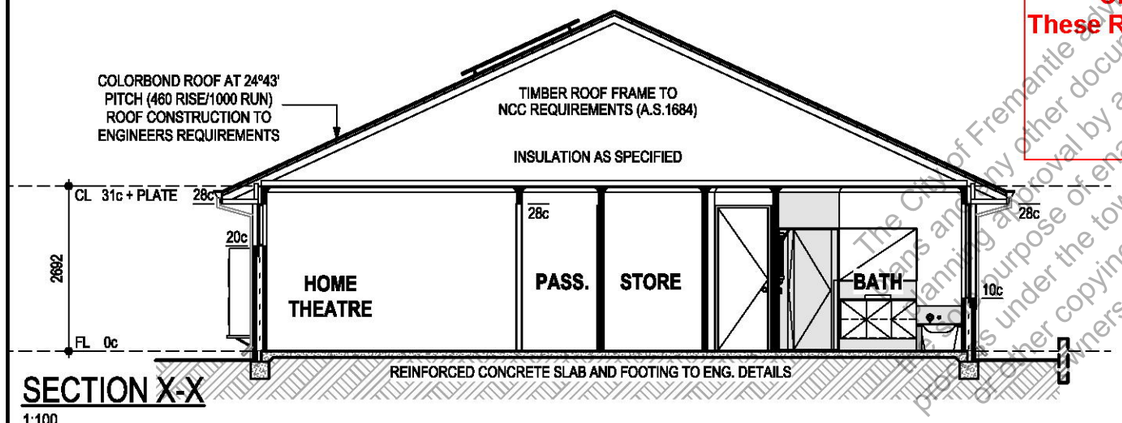

SECTION X-X

1:100

CITY OF FREMANTLE
These Revised Plans Form Part of
DA0168/25
14 August 2025

The City of Fremantle advises that the inspection of these plans and any other documents relevant to this application for planning approval by a member of the public is provided solely for the purpose of enabling consideration as part of the application process under the town planning scheme. Photographing, sketching or other copying of this information is prohibited and copyright owners are entitled to take legal action against any person who infringes their copyright.

REV	VO #	DRN	DATE	CHK
01	CERTS, PPAV	RX-JX	21/05/2025	HBH
02	PCV 04	RX-ED	03/07/2025	HBH
03	PCV 05	HBH	30/07/2025	HBH
03	PCV 05	HBH	12/08/2025	HBH

Sub-contractors to verify all dimensions on site.

WORKING DRAWINGS

THIS IS ONE OF THE DRAWINGS REFERRED TO IN THE CONTRACT.

DATED:...../...../.....

OWNER ..... WITNESS .....

OWNER ..... WITNESS .....

BUILDER ..... WITNESS .....

ADDRESS:

LOT 491
McCOMBE AVENUE
SAMSON

KOOMBANA BAY

E & OE

TYPE: 2c BRICK

MODEL N° KO02

LUXE SPECIFICATION

A3

© COPYRIGHT

SHEET N° 5 OF 9 + 5 ANC

JOB N° 311009

REVISION 03

DATE 12/08/2025

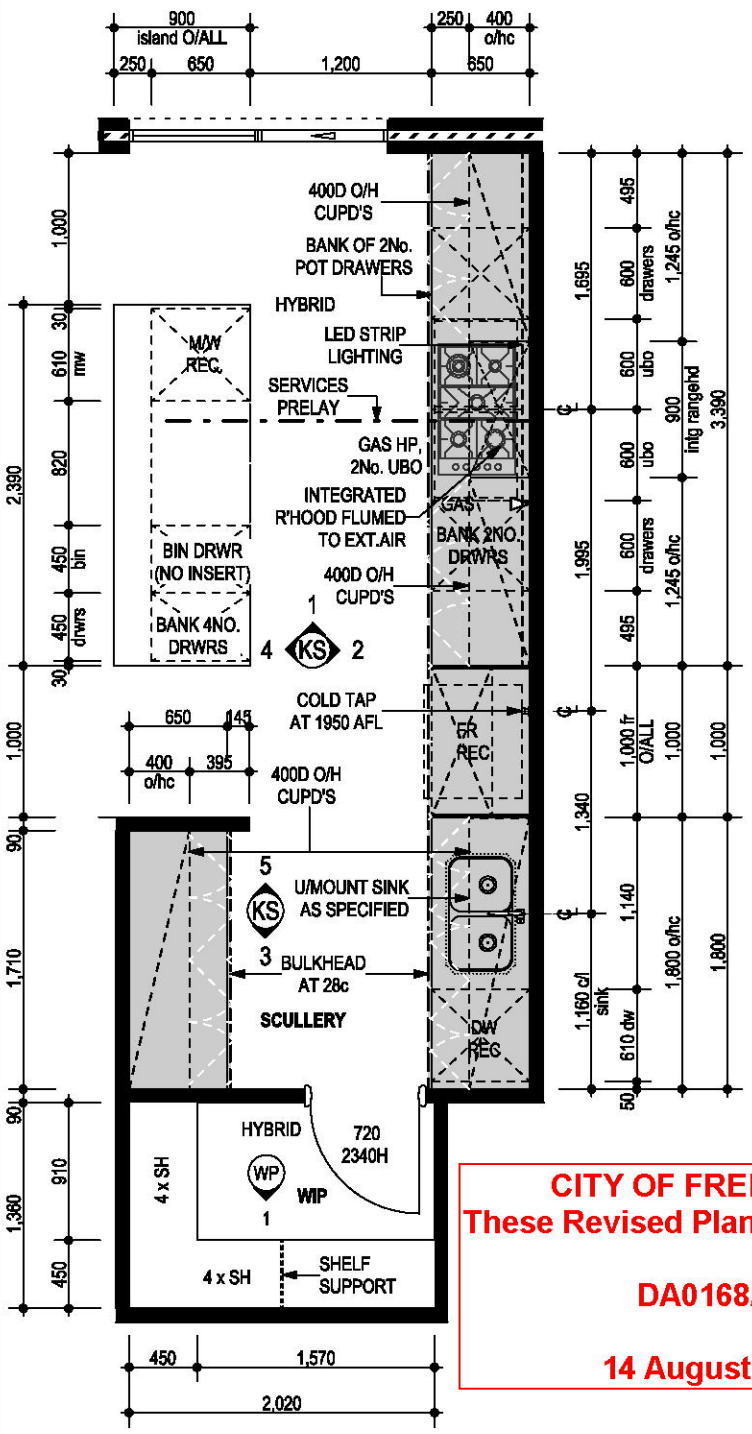

KITCHEN / SCULLERY & WIP

1:50

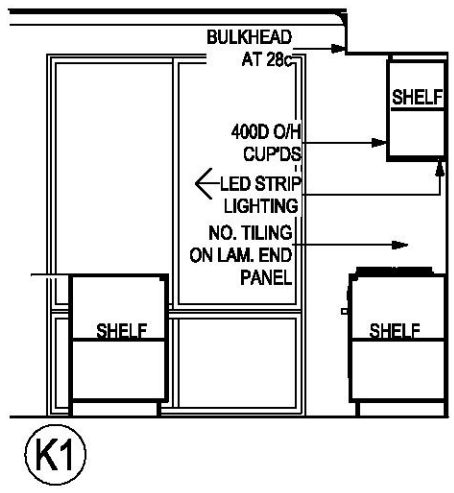

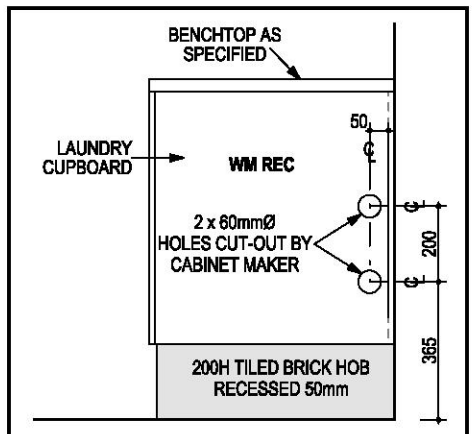

HOLE CUT-OUT POSITIONS FOR WM CONNECTION

NOT TO SCALE

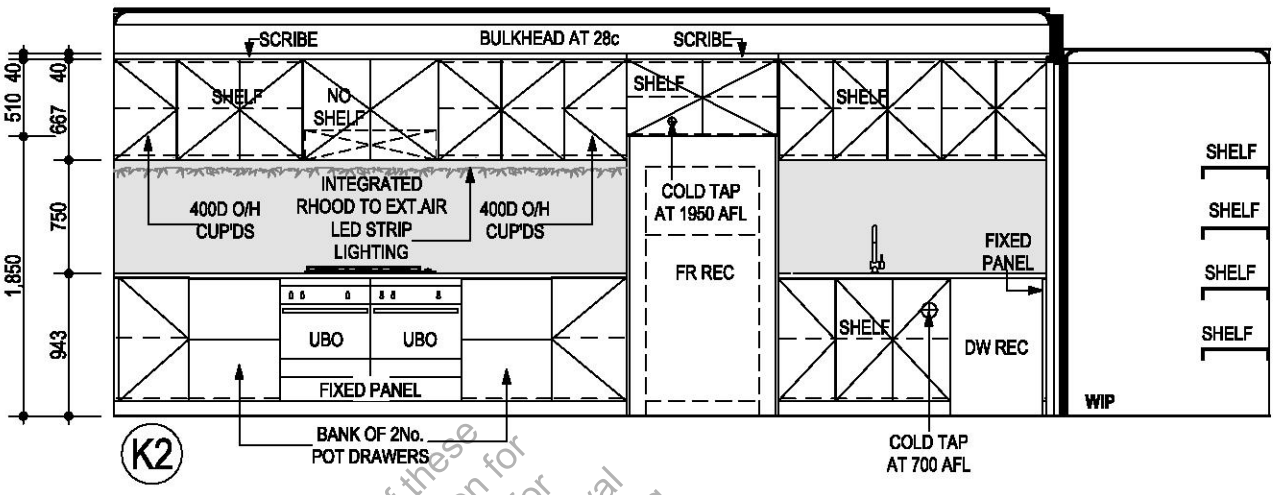

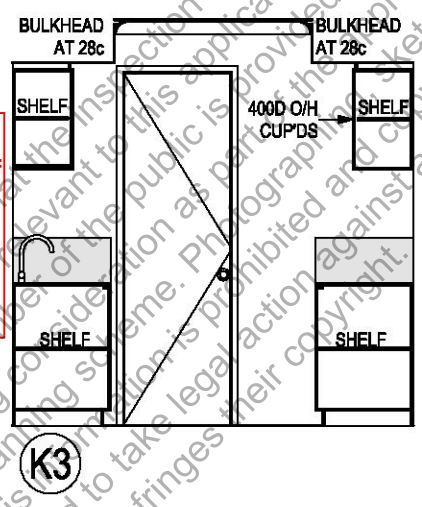

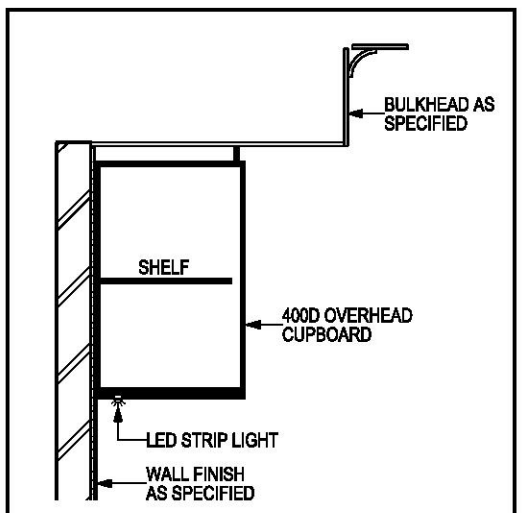

LED STRIP LIGHT DETAIL

NOT TO SCALE

CITY OF FREMANTLE
These Revised Plans Form Part of
DA0168/25
14 August 2025

The City of Fremantle advises that the inspection of these plans and any other document relevant to this application for planning approval by a member of the public is provided for the sole purpose of enabling consideration as part of the planning process under the town planning scheme. Photographing, sketching or other copying of this information is prohibited and copyright owners are entitled to take legal action against any person who infringes their copyright.

CABINETMAKER NOTE:

- ANY DISCREPANCIES IN DOCUMENTATION ARE TO BE REFFERED BACK TO THE SUPERVISOR FOR RESOLUTION PRIOR TO MANUFACTURER OR INSTALLATION OF CABINETS.
- WHERE CUPBOARDS ABUT A WALL, A SCRIBED FILLET WILL BE FIXED BETWEEN THE WALL FACE AND THE END OF THE CUPBOARD.
- ALL DIMENSIONS ARE NOMINAL ONLY.
- REFER TO ADDENDA FOR MANUFACTURERS INSTALLATION MANUALS & CUT-OUT SIZES.
- CABINETS AND BENCHTOPS AS PER ADDENDA.

APPLIANCE RECESS SIZE NOTE:

- IT IS THE RESPONSIBILITY OF THE OWNER TO ENSURE THAT THE APPLIANCE RECESS SIZES AS INDICATED ON THESE PLANS FOR ALL OWNER SUPPLIED APPLIANCES ARE OF ADEQUATE SIZE TO SUIT THEIR APPLIANCE.
- IF THE SIZES ARE NOT SUITABLE THE BUILDER MUST BE NOTIFIED PRIOR TO CONSTRUCTION, OTHERWISE NO RESPONSIBILITY CAN BE ACCEPTED FOR INCORRECT SIZES.

TILER NOTE:

- PROVIDE MITRED EDGE TO TILING THROUGHOUT, WHERE PRACTICAL.
- FLOOR TILES IN SHOWER RECESSES TO BE INSTALLED WITH A MINIMUM CONTINUOUS FALL OF 1:80 TOWARDS THE FLOOR WASTE AS PER BCA & AS 3740–2021.

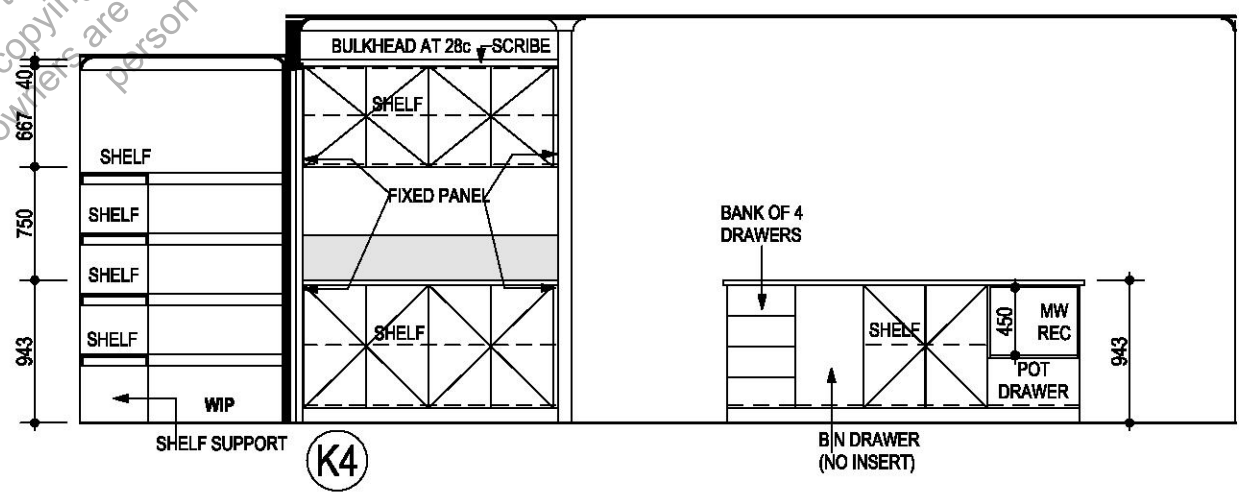

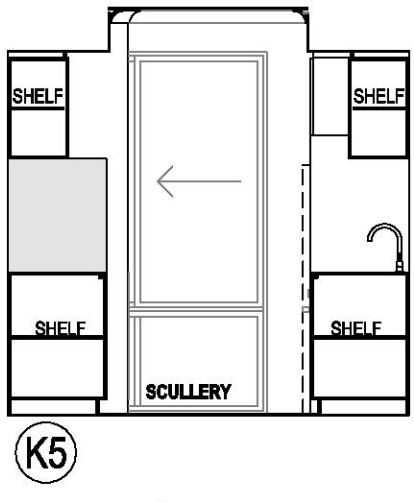

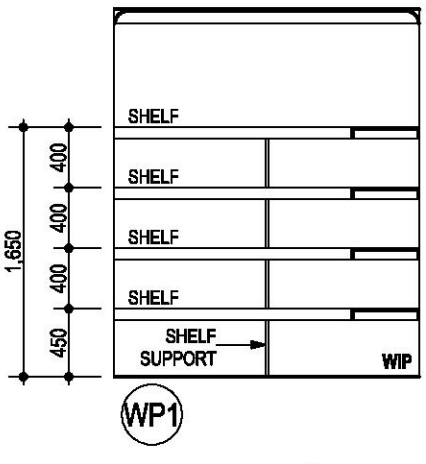

REV	VO #	DRN	DATE	CHK
		RX-JX	21/05/2025	HBH
01	CERTS, PPAV	RX-ED	03/07/2025	HBH
02	PCV 04	HBH	30/07/2025	HBH
03	PCV 05	HBH	12/08/2025	HBH

Sub-contractors to verify all dimensions on site.

WORKING DRAWINGS

THIS IS ONE OF THE DRAWINGS REFERRED TO IN THE CONTRACT.

DATED:...../...../.....

OWNER ..... WITNESS .....

OWNER ..... WITNESS .....

BUILDER ..... WITNESS .....

ADDRESS:
LOT 491
McCOMBE AVENUE
SAMSON

KOOMBANA BAY E & OE
TYPE: 2c BRICK

MODEL N° KO02 LUXE SPECIFICATION A3

REVISION 03

DATE 12/08/2025

© COPYRIGHT

SHEET N° 6 OF 9 + 5 ANC

JOB N° 311009

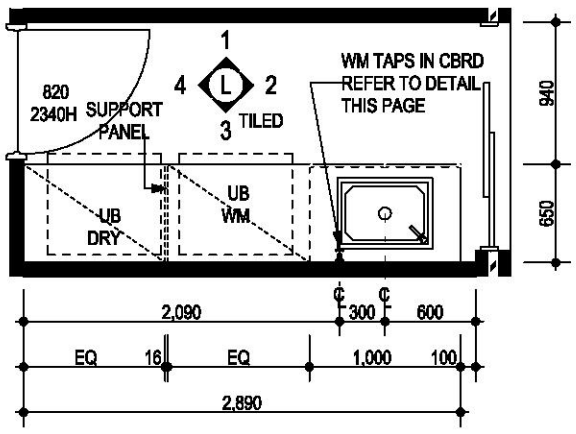

LAUNDRY
1:50

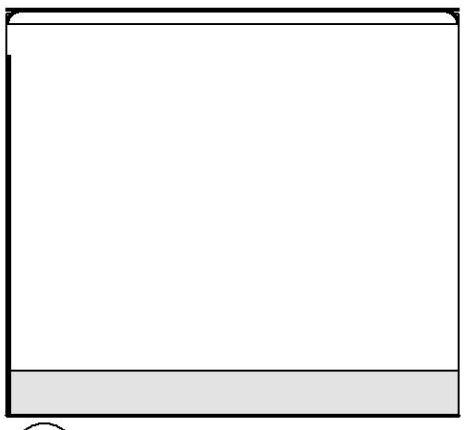

L1

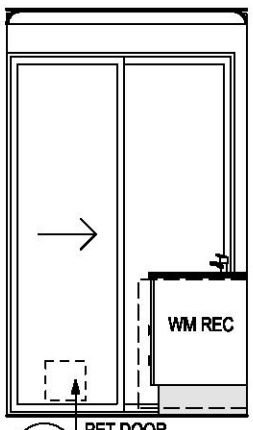

L2

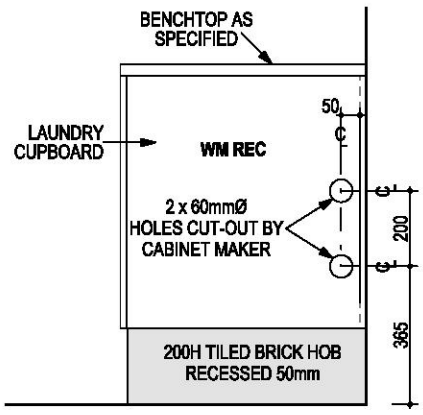

HOLE CUT-OUT POSITIONS FOR WM CONNECTION
NOT TO SCALE

CABINETMAKER NOTE:
- ANY DISCREPANCIES IN DOCUMENTATION ARE TO BE REFFERED BACK TO THE SUPERVISOR FOR RESOLUTION PRIOR TO MANUFACTURER OR INSTALLATION OF CABINETS.
- WHERE CUPBOARDS ABUT A WALL, A SCRIBED FILLET WILL BE FIXED BETWEEN THE WALL FACE AND THE END OF THE CUPBOARD.
- ALL DIMENSIONS ARE NOMINAL ONLY.
- REFER TO ADDENDA FOR MANUFACTURERS INSTALLATION MANUALS & CUT-OUT SIZES.
- CABINETS AND BENCHTOPS AS PER ADDENDA.

APPLIANCE RECESS SIZE NOTE:
- IT IS THE RESPONSIBILITY OF THE OWNER TO ENSURE THAT THE APPLIANCE RECESS SIZES AS INDICATED ON THESE PLANS FOR ALL OWNER SUPPLIED APPLIANCES ARE OF ADEQUATE SIZE TO SUIT THEIR APPLIANCE.
- IF THE SIZES ARE NOT SUITABLE THE BUILDER MUST BE NOTIFIED PRIOR TO CONSTRUCTION, OTHERWISE NO RESPONSIBILITY CAN BE ACCEPTED FOR INCORRECT SIZES.

TILER NOTE:
- PROVIDE MITRED EDGE TO TILING THROUGHOUT, WHERE PRACTICAL.
- FLOOR TILES IN SHOWER RECESSES TO BE INSTALLED WITH A MINIMUM CONTINUOUS FALL OF 1:80 TOWARDS THE FLOOR WASTE AS PER BCA & AS 3740–2021.

CEILING NOTE:
- CORNICE TO BE INSTALLED AFTER FULL HEIGHT TILING TO APPLICABLE AREAS.

NOTE:
- GLAZED PIVOT DOORS, SCREENS & MIRROR SIZES ARE NOMINAL ONLY & SUBJECT TO SITE MEASURE WHERE REQUIRED. NO ALLOWANCE MADE FOR ANY WALL FINISH OR TILING THICKNESS.

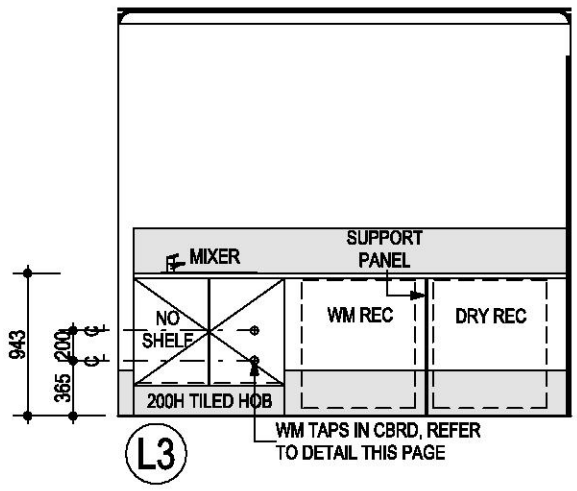

L3

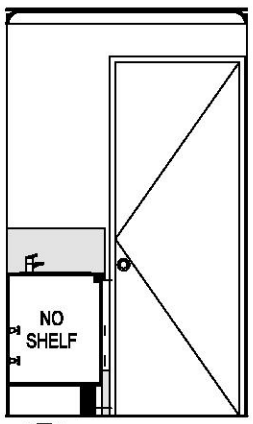

L4

CITY OF FREMANTLE
These Revised Plans Form Part of
DA0168/25
14 August 2025

The City of Fremantle advises that the inspection of these plans and any other documents relevant to this application for planning approval by a member of the public is provided for the sole purpose of enabling consideration as part of the approval process under the town planning scheme. Photographing, sketching or other copying of this information is prohibited and copyright owners are entitled to take legal action against any person who infringes their copyright

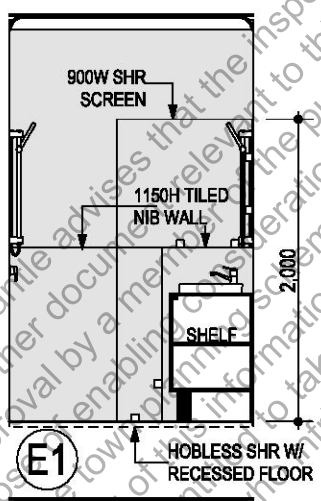

E1

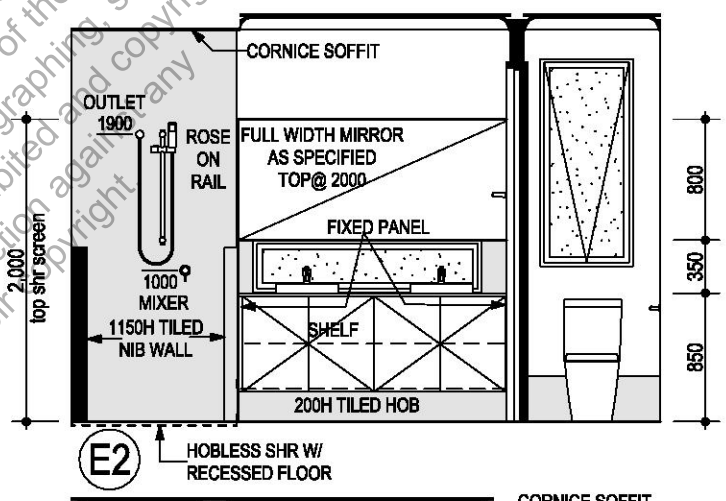

E2

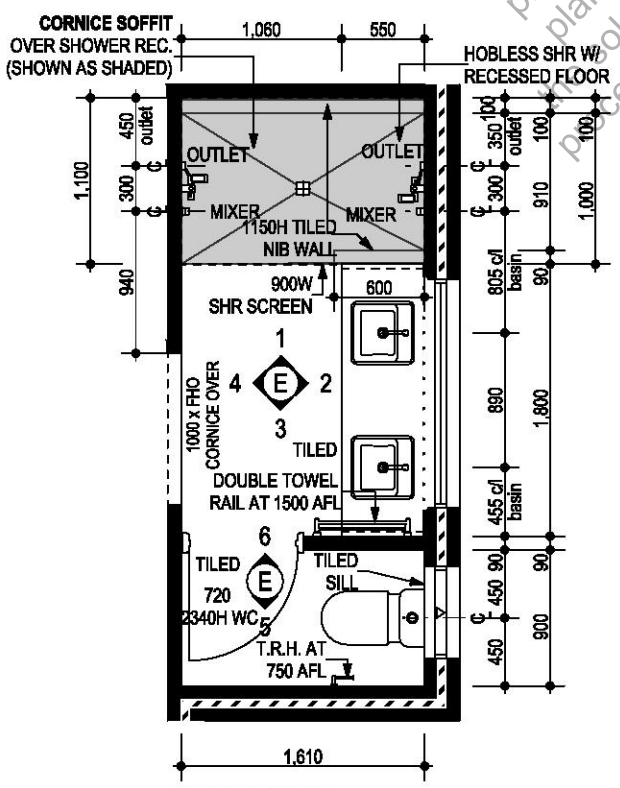

ENSUITE
1:50

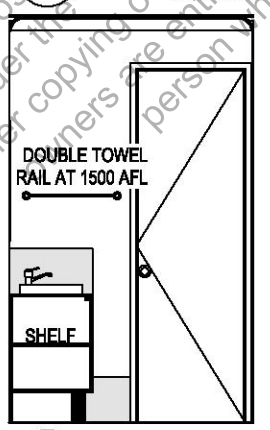

E3

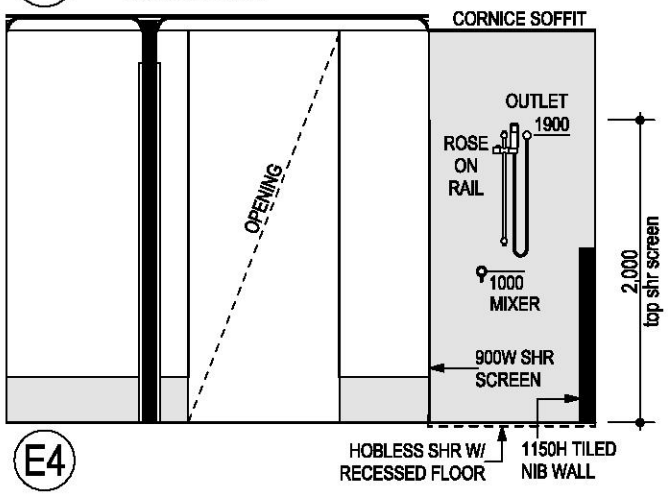

E4

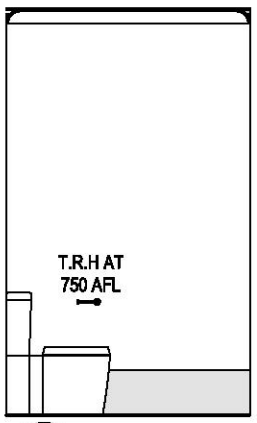

E5

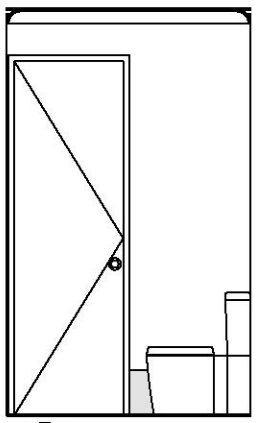

E6

REV	VO #	DRN	DATE	CHK
01	CERTS, PPAV	RX-JX	21/05/2025	HBH
02	PCV 04	RX-ED	03/07/2025	HBH
03	PCV 05	HBH	12/08/2025	HBH

Sub-contractors to verify all dimensions on site.

WORKING DRAWINGS
THIS IS ONE OF THE DRAWINGS REFERRED TO IN THE CONTRACT.
DATED:...../...../.....
OWNER WITNESS
OWNER WITNESS
BUILDER WITNESS

ADDRESS:
LOT 491
McCOMBE AVENUE
SAMSON

KOOMBANA BAY E & OE
TYPE: 2c BRICK
MODEL N° KO02
LUXE SPECIFICATION
A3
© COPYRIGHT
SHEET N° 7 OF 9 + 5 ANC
JOB N° 311009
REVISION 03
DATE 12/08/2025

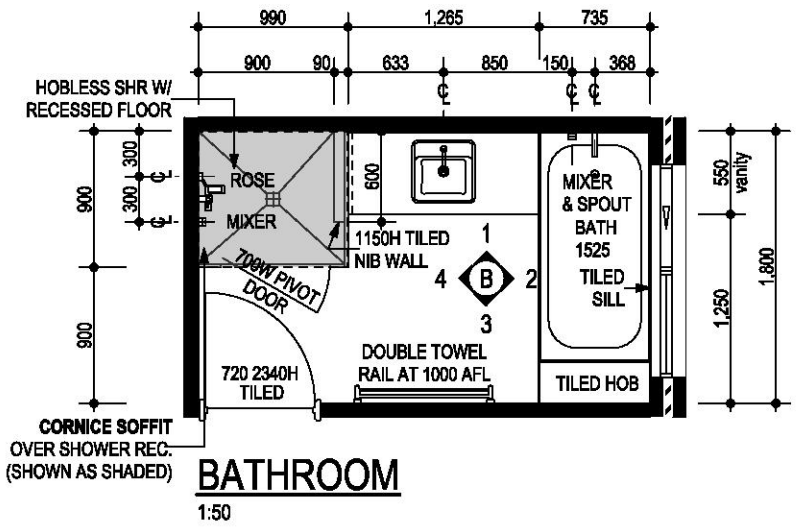

BATHROOM

1:50

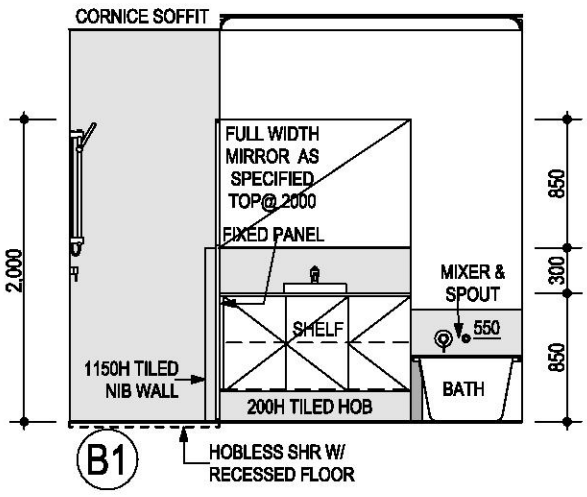

B1

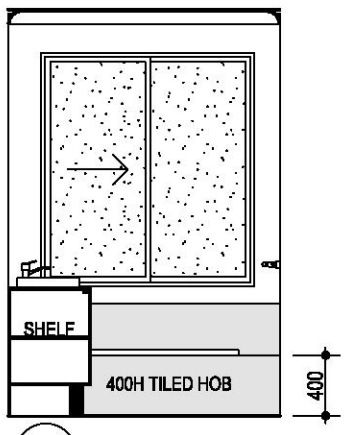

B2

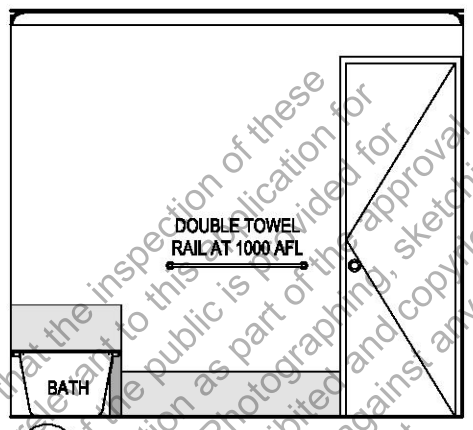

B3

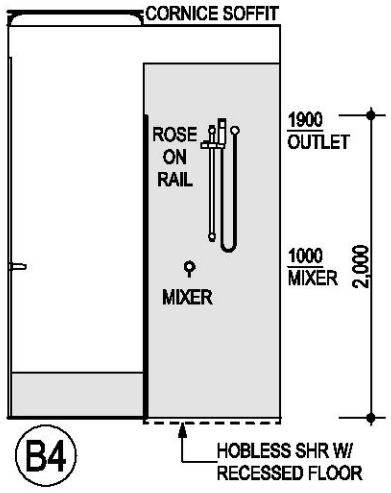

B4

CABINETMAKER NOTE:

- ANY DISCREPANCIES IN DOCUMENTATION ARE TO BE REFFERED BACK TO THE SUPERVISOR FOR RESOLUTION PRIOR TO MANUFACTURER OR INSTALLATION OF CABINETS.
- WHERE CUPBOARDS ABUT A WALL, A SCRIBED FILLET WILL BE FIXED BETWEEN THE WALL FACE AND THE END OF THE CUPBOARD.
- ALL DIMENSIONS ARE NOMINAL ONLY.
- REFER TO ADDENDA FOR MANUFACTURERS INSTALLATION MANUALS & CUT-OUT SIZES.
- CABINETS AND BENCHTOPS AS PER ADDENDA.

TILER NOTE:

- PROVIDE MITRED EDGE TO TILING THROUGHOUT, WHERE PRACTICAL.
- FLOOR TILES IN SHOWER RECESSES TO BE INSTALLED WITH A MINIMUM CONTINUOUS FALL OF 1:80 TOWARDS THE FLOOR WASTE AS PER BCA & AS 3740–2021.

CEILING NOTE:

- CORNICE TO BE INSTALLED AFTER FULL HEIGHT TILING TO APPLICABLE AREAS.

NOTE:

- GLAZED PIVOT DOORS, SCREENS & MIRROR SIZES ARE NOMINAL ONLY & SUBJECT TO SITE MEASURE WHERE REQUIRED. NO ALLOWANCE MADE FOR ANY WALL FINISH OR TILING THICKNESS.

The City of Fremantle advises that the inspection of these plans and any other document relevant to this application for planning approval by a member of the public is provided for the sole purpose of enabling consideration as part of the approval process under the town planning scheme. Photographing, sketching or other copying of this information is prohibited and copyright owners are entitled to take legal action against any person who infringes their copyright.

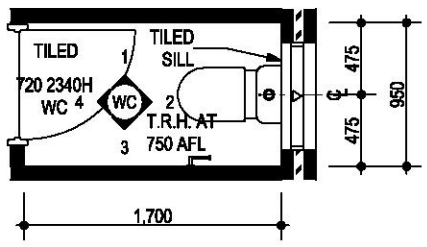

WC

1:50

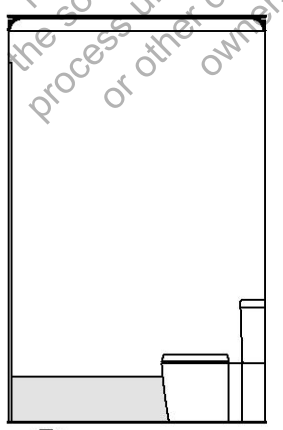

WC1

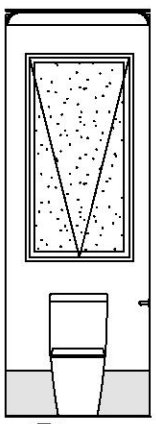

WC2

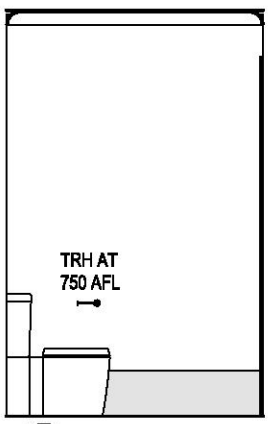

WC3

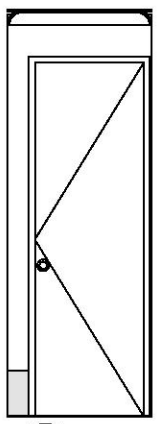

WC4

CITY OF FREMANTLE
These Revised Plans Form Part of

DA0168/25

14 August 2025

REV	VO #	DRN	DATE	CHK
		RX-JX	21/05/2025	HBH
01	CERTS, PPAV	RX-ED	03/07/2025	HBH
02	PCV 04	HBH	30/07/2025	HBH
03	PCV 05	HBH	12/08/2025	HBH

Sub-contractors to verify all dimensions on site.

WORKING DRAWINGS
THIS IS ONE OF THE DRAWINGS REFERRED TO IN THE CONTRACT.

DATED:...../...../.....

OWNER ..... WITNESS .....
OWNER ..... WITNESS .....
BUILDER ..... WITNESS .....

ADDRESS:
LOT 491
McCOMBE AVENUE
SAMSON

KOOMBANA BAY
TYPE: 2c BRICK
E & OE

REVISION 03

MODEL N° KO02
LUXE SPECIFICATION
A3

DATE 12/08/2025

© COPYRIGHT

SHEET N° 8 OF 9 + 5 ANC

JOB N° 311009

ELECTRICAL LEGEND - GROUND FLOOR

DATA & SECURITY		
D1	DATA-1	1
	KEYPAD	1
	PHONE POINT	1
S	SMOKE DETECTOR (INTERCONNECTED)	2
	TV POINT	1
LIGHTING		
	CEILING LIGHT	6
	CEILING SWEEP FAN	3
	CEILING SWEEP FAN / LIGHT	1
	DOWN LIGHT - LED	20
	EXHAUST FAN (FLUMED) - CEILING MOUNTED	4
	PLUG BASE	1
	WALL LIGHT @ HEIGHT NOMINATED A.F.L.	1
MISCELLANEOUS		
A/C	AIRCONDITIONER CONTROL PANEL	2
C	CONDUIT	2
POWER		
CM	GPO CEILING MOUNTED	2
	GPO DOUBLE @ 300 A.F.L.	9
	GPO DOUBLE @ HEIGHT NOMINATED A.F.L.	5
32 AMP	GPO DOUBLE 32 AMP WEATHERPROOF @ HEIGHT NOMINATED A.F.L.	1
	GPO SINGLE @ HEIGHT NOMINATED A.F.L.	7
	GPO SINGLE WEATHERPROOF @ HEIGHT NOMINATED A.F.L.	1
32 AMP WP	ISOLATION SWITCH 32 AMP WEATHERPROOF @ HEIGHT NOMINATED A.F.L.	1

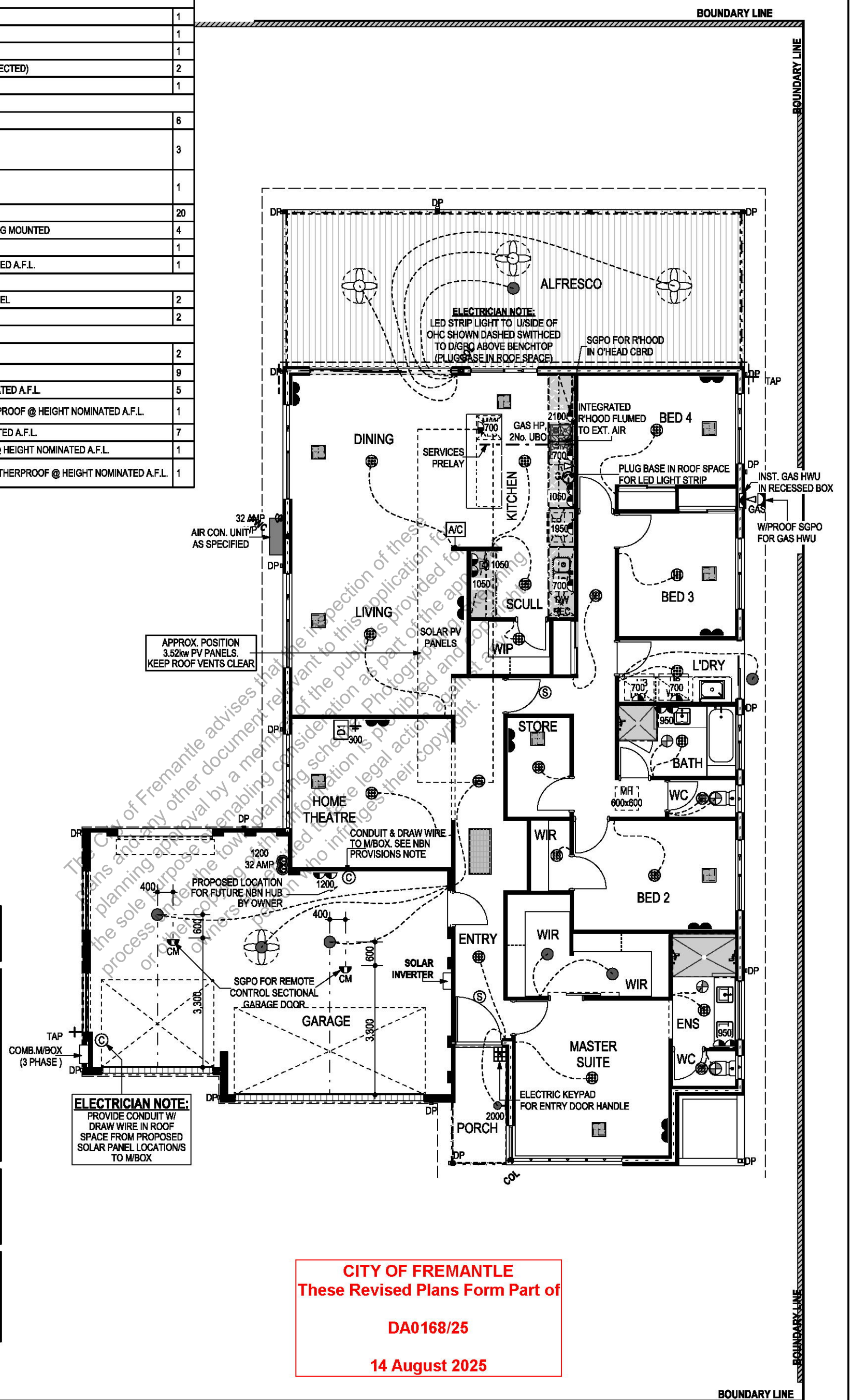

AIR-CON. LEGEND

- A/C — A/C CONTROL PAD (W/ 25mm CONDUIT WHEN ON INTERNAL WALL)
- RETURN AIR GRILLE
- CEILING VENT
- OUTDOOR MOTOR

NOTE:

- PROVIDE DUCTED REVERSE CYCLE AIR-CON SYSTEM. REFER MANUFACTURERS LAYOUT.

PRESTART NOTE:

- POSITION OF 1 TELEPHONE POINT TO BE ADVISED BY OWNER AT PRESTART MEETING.
- POSITION OF 1 T.V. POINT TO BE ADVISED BY OWNER AT PRESTART MEETING.
- NBN PROVISIONS AS PER SITE RELATED COST SHEET TO BE POSITIONED AT PRESTART MEETING.
- POSITION OF 46 ADDITIONAL DOUBLE GPO'S TO BE ADVISED BY OWNER AT PRESTART MEETING.
- PROVIDE ADDITIONAL 15No. DOUBLE POWER POINTS TO BE ADVISED AT PRESTART MEETING.
- PROVIDE 2No. WEATHERPROOF DOUBLE POWER POINT TO BE ADVISED AT PRESTART MEETING.

ELECTRICIAN NOTE:

- SINGLE GPO ADJACENT TO DW RECESS AT 700 AFL.
- SINGLE GPO IN CUPBOARD FOR OVEN AT 700 AFL.
- SINGLE WP/GPO FOR HWU AT 1200 AFL.

NBN PROVISIONS NOTE:

- CONDUIT W/ DRAW WIRE IN ROOF SPACE FROM PROPOSED NBN ENCLOSURE LOCATION TO ROOF OVER METERBOX BY BUILDER. NBN ENCLOSURE, CABLING & CONNECTION BY OWNER AFTER HANDOVER.

The City of Fremantle advises that the inspection of these plans and any other document relevant to this application for planning approval by a member of the public is provided for the sole purpose of enabling consideration as part of the approval process under the town planning scheme. Photographing, scanning or other copying of this information is prohibited and copyright owners permitted to take legal action against any person who infringes their copyright.

CITY OF FREMANTLE
These Revised Plans Form Part of
DA0168/25
14 August 2025

ELECTRICAL LAYOUT

1:100

REV	VO #	DRN	DATE	CHK
		RX-JX	21/05/2025	HBH
01	CERTS, PPAV	RX-ED	03/07/2025	HBH
02	PCV 04	HBH	30/07/2025	HBH
03	PCV 05	HBH	12/08/2025	HBH

Sub-contractors to verify all dimensions on site.

WORKING DRAWINGS
THIS IS ONE OF THE DRAWINGS REFERRED TO IN THE CONTRACT.
DATED:...../...../.....
OWNER — WITNESS
OWNER — WITNESS
BUILDER — WITNESS

ADDRESS:
LOT 491
McCOMBE AVENUE
SAMSON

KOOMBANA BAY
TYPE: 2c BRICK — E & OE
REVISION 03
MODEL N° KO02 — LUXE SPECIFICATION A3
DATE 12/08/2025
© COPYRIGHT
SHEET N° 9 OF 9 + 5 ANC
JOB N° 311009

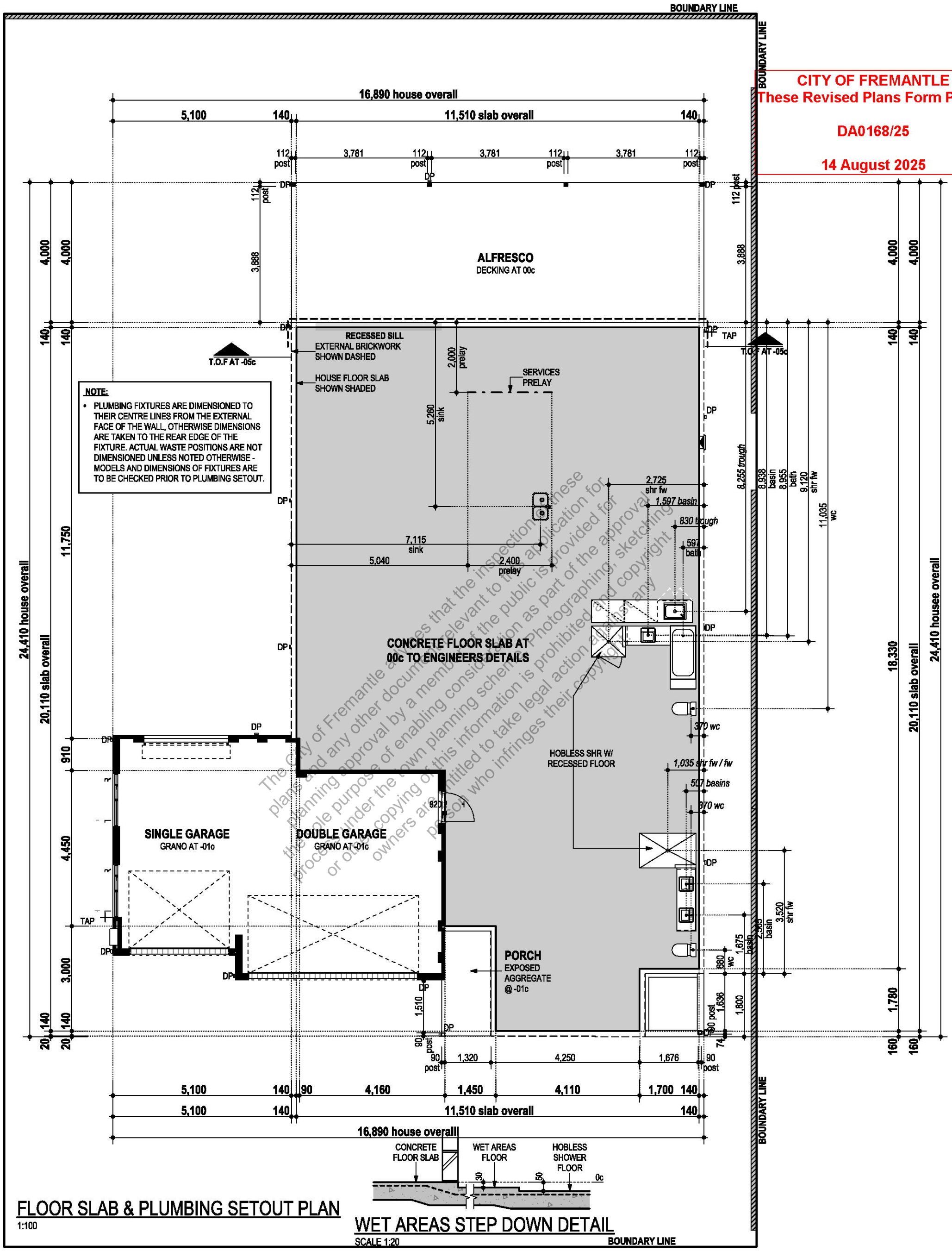

NOTE:

- PLUMBING FIXTURES ARE DIMENSIONED TO THEIR CENTRE LINES FROM THE EXTERNAL FACE OF THE WALL, OTHERWISE DIMENSIONS ARE TAKEN TO THE REAR EDGE OF THE FIXTURE. ACTUAL WASTE POSITIONS ARE NOT DIMENSIONED UNLESS NOTED OTHERWISE - MODELS AND DIMENSIONS OF FIXTURES ARE TO BE CHECKED PRIOR TO PLUMBING SETOUT.

CITY OF FREMANTLE
These Revised Plans Form Part of
DA0168/25
14 August 2025

The City of Fremantle advises that the inspection of these plans and any other documents relevant to this application for planning approval by a member of the public is provided for the sole purpose of enabling consideration as part of the approval procedure under the town planning scheme. Photographing, sketching or other copying of this information is prohibited and copyright owners are entitled to take legal action against any person who infringes their copyright.

FLOOR SLAB & PLUMBING SETOUT PLAN

1:100

WET AREAS STEP DOWN DETAIL

SCALE 1:20

REV	VO #	DRN	DATE	CHK
01	CERTS, PPAV	RX-ED	03/07/2025	HBH
02	PCV 04	HBH	30/07/2025	HBH
03	PCV 05	HBH	12/08/2025	HBH

Sub-contractors to verify all dimensions on site.

ANCILLARY DRAWINGS

THESE DRAWINGS DO NOT FORM PART OF THE CONTRACT DOCUMENTATION

TO BE USED FOR REFERENCE PURPOSES ONLY

ADDRESS:
LOT 491
McCOMBE AVENUE
SAMSON

KOOMBANA BAY
TYPE: 2c BRICK
E & OE

REVISION 03

MODEL N° KO02
LUXE SPECIFICATION A3

DATE 12/08/2025

© COPYRIGHT

ANC SHEET N° D1 OF 5

JOB N° 311009

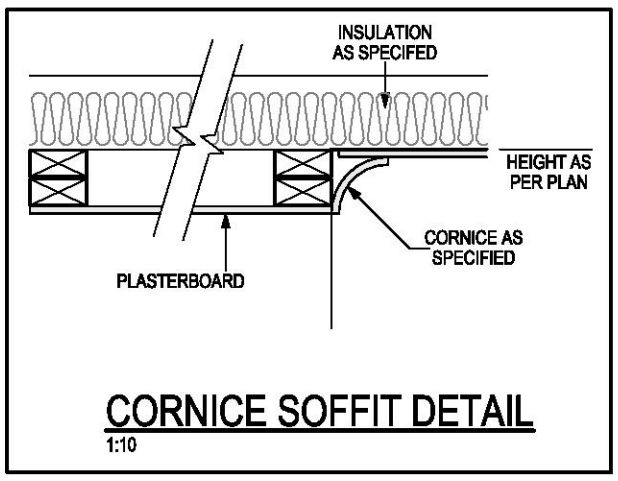

CORNICE SOFFIT DETAIL
1:10

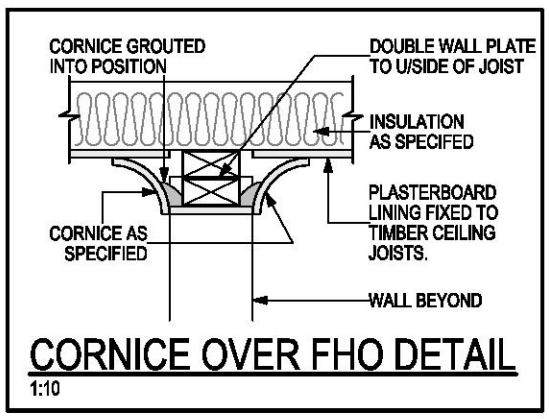

CORNICE OVER FHO DETAIL
1:10

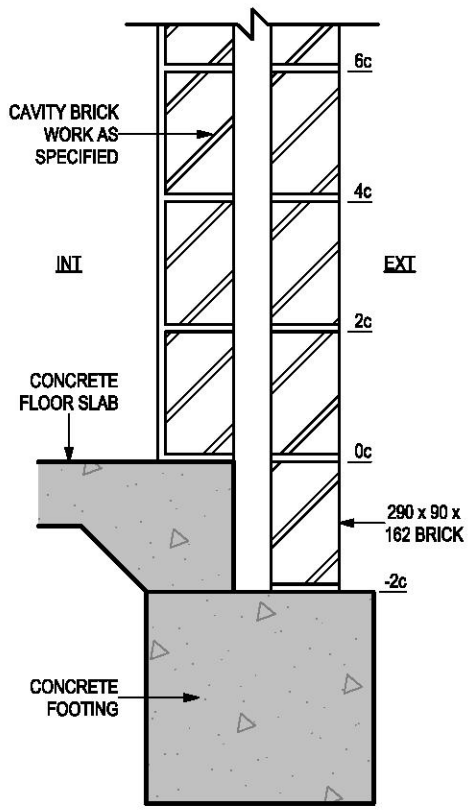

BRICK COURSING DETAIL
SCALE 1:10

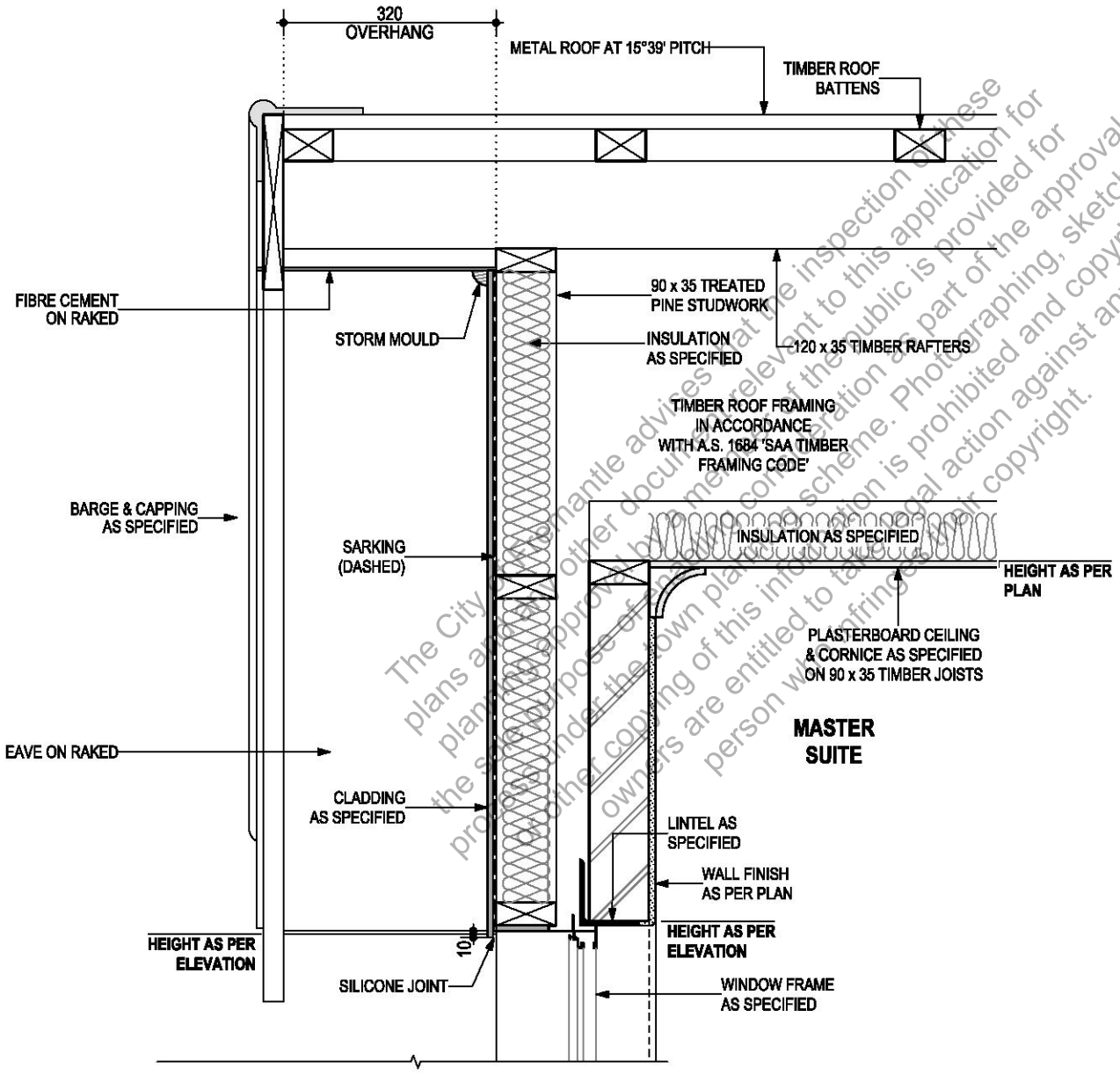

D1 - MASTER SUITE EAVE & CLADDING HEAD DETAIL
SCALE 1:10

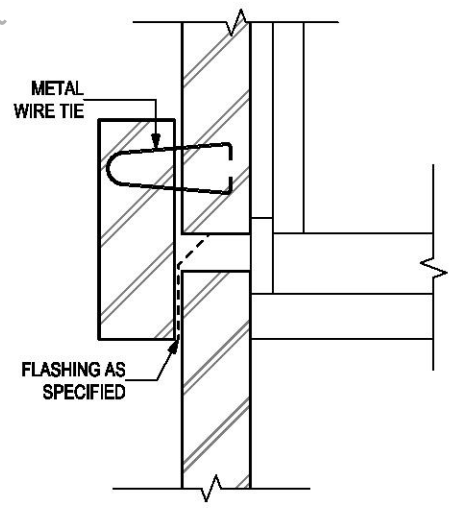

CAVITY CLOSER DETAIL 'A'
SCALE 1:10

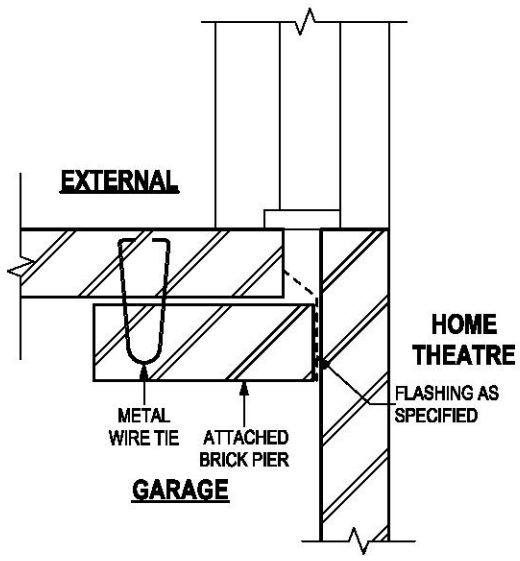

CAVITY CLOSER DETAIL 'B'
SCALE 1:10

The City of Fremantle advises that the inspection of these plans and any other documents relevant to this application for planning approval by members of the public is provided for the sole purpose of information as part of the approval process under the town planning scheme. Photographing, sketching or other copying of this information is prohibited and copyright owners are entitled to take legal action against any person who infringes their copyright.

CITY OF FREMANTLE
These Revised Plans Form Part of

DA0168/25

14 August 2025

REV	VO #	DRN	DATE	CHK
		RX-JX	21/05/2025	HBH
01	CERTS, PPAV	RX-ED	03/07/2025	HBH
02	PCV 04	HBH	30/07/2025	HBH
03	PCV 05	HBH	12/08/2025	HBH

Sub-contractors to verify all dimensions on site.

ANCILLARY DRAWINGS

THESE DRAWINGS DO NOT FORM PART OF THE CONTRACT DOCUMENTATION

TO BE USED FOR REFERENCE PURPOSES ONLY

ADDRESS:
LOT 491
McCOMBE AVENUE
SAMSON

KOOMBANA BAY E & OE
TYPE: 2c BRICK
MODEL N° KO02 A3
LUXE SPECIFICATION
REVISION 03
DATE 12/08/2025
© COPYRIGHT
ANC SHEET N° D2 OF 5
JOB N° 311009

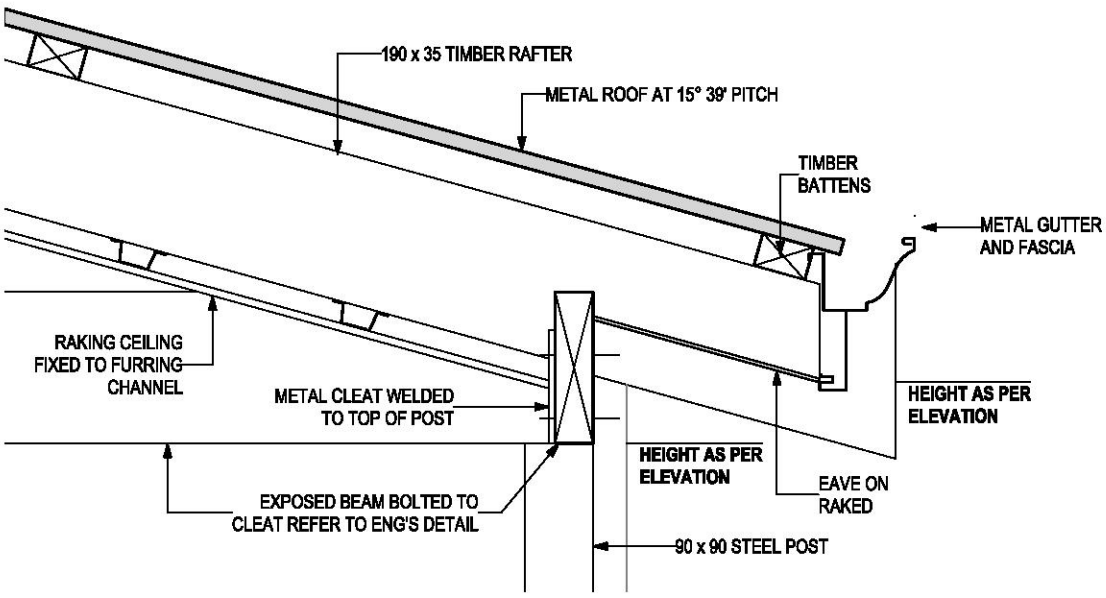

D2 - PORCH RAKING CEILING DETAIL

SCALE 1:10

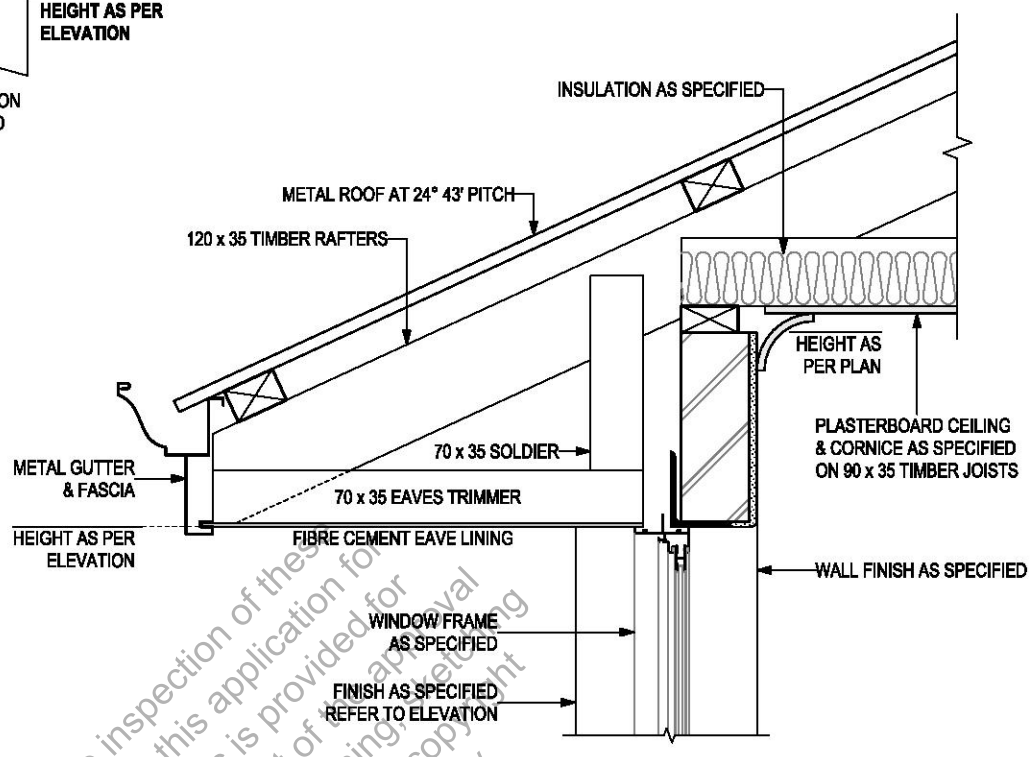

D3 - EAVE DETAIL

SCALE 1:10

The City of Fremantle advises that the inspection of these plans and any other documents relevant to this application for planning approval by a member of the public is provided for the sole purpose of enabling consideration as part of the approval process under the town planning scheme. Photographing, sketching or other copying of this information is prohibited and copyright owners are entitled to take legal action against any person who infringes their copyright.

CITY OF FREMANTLE
These Revised Plans Form Part of
DA0168/25
14 August 2025

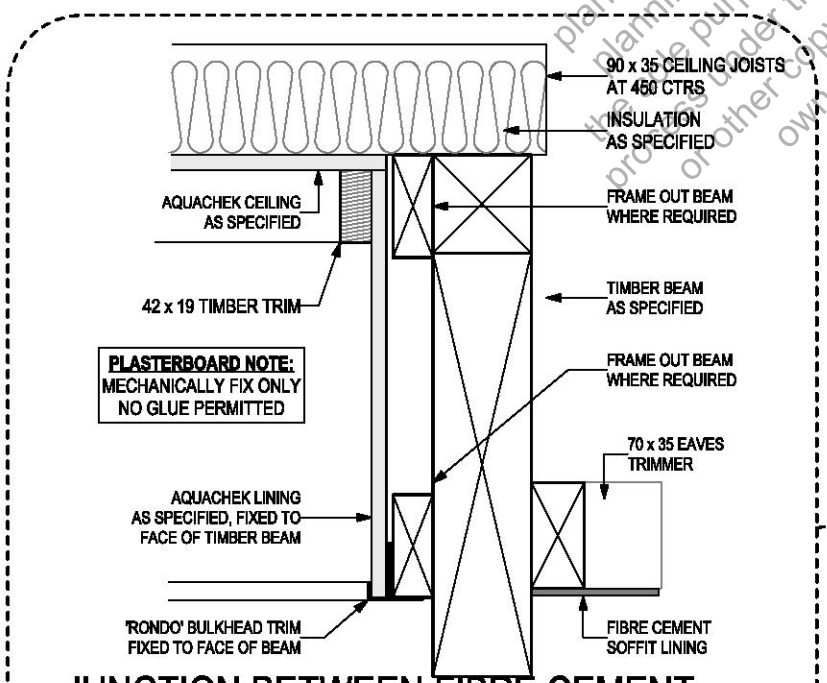

JUNCTION BETWEEN FIBRE CEMENT EAVE LINING & PLASTERBOARD CEILING

NOT TO SCALE

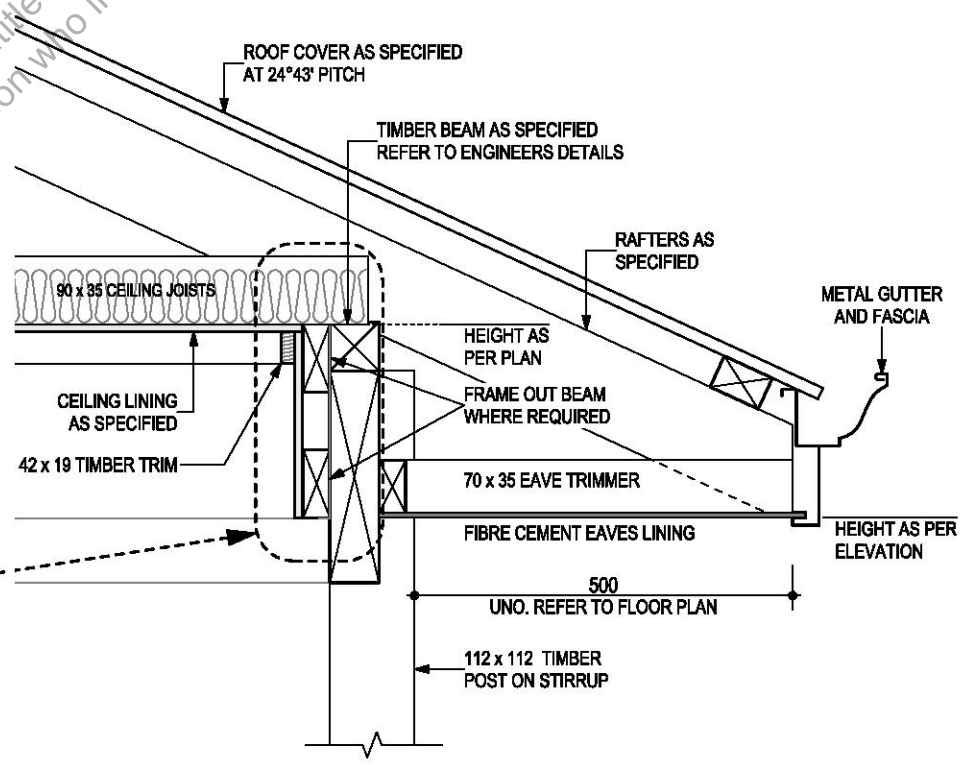

D4 - ALFRESCO EAVE W/ TIMBER POST DETAIL

SCALE 1:10

REV	VO #	DRN	DATE	CHK
		RX-JX	21/05/2025	HBH
01	CERTS, PPAV	RX-ED	03/07/2025	HBH
02	PCV 04	HBH	30/07/2025	HBH
03	PCV 05	HBH	12/08/2025	HBH

Sub-contractors to verify all dimensions on site.

ANCILLARY DRAWINGS

THESE DRAWINGS DO NOT FORM PART OF THE CONTRACT DOCUMENTATION

TO BE USED FOR REFERENCE PURPOSES ONLY

ADDRESS:
LOT 491
McCOMBE AVENUE
SAMSON

KOOMBANA BAY
TYPE: 2c BRICK
E & OE

REVISION 03

MODEL N° KO02
LUXE SPECIFICATION A3

DATE 12/08/2025

© COPYRIGHT

ANC SHEET N° D3 OF 5

JOB N° 311009

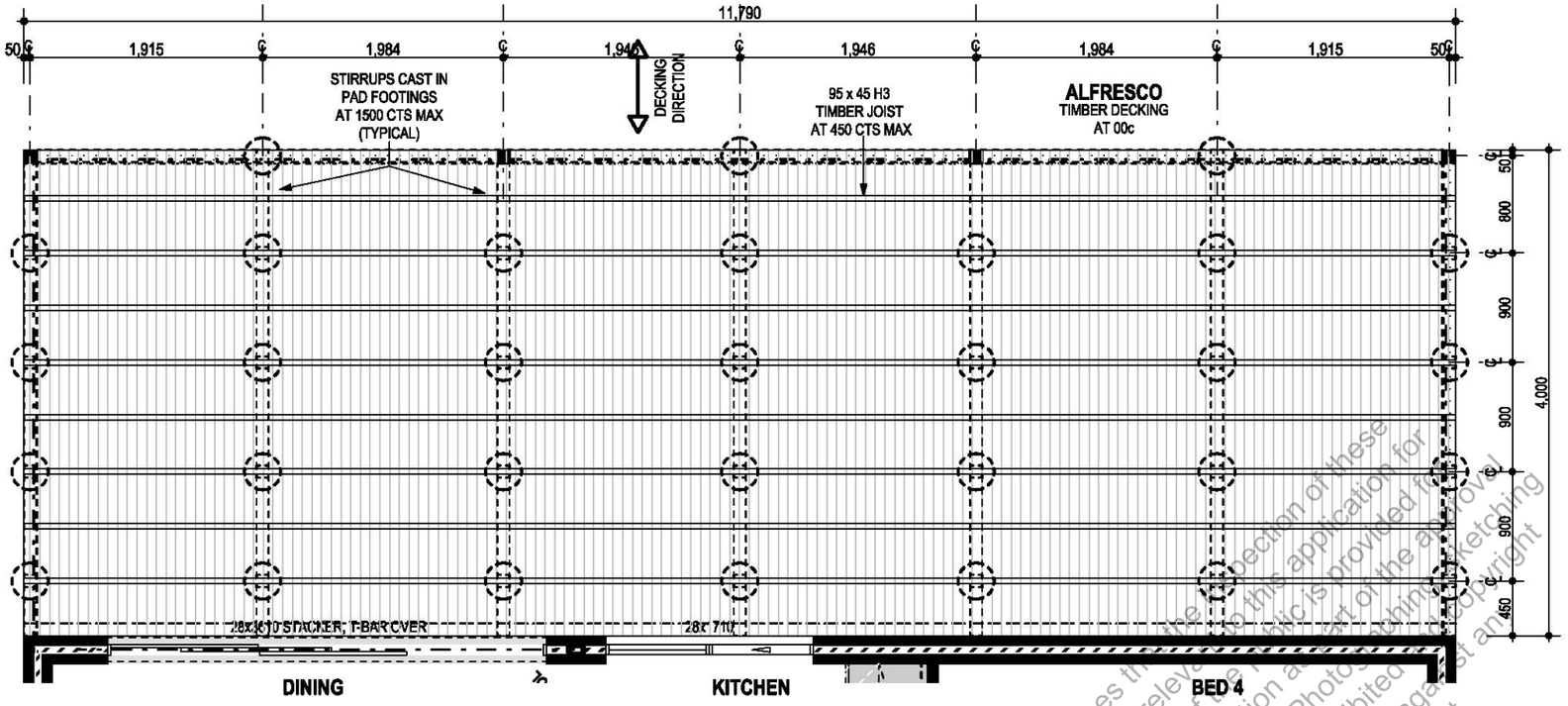

ALFRFESCO DECKING PLAN

1:50

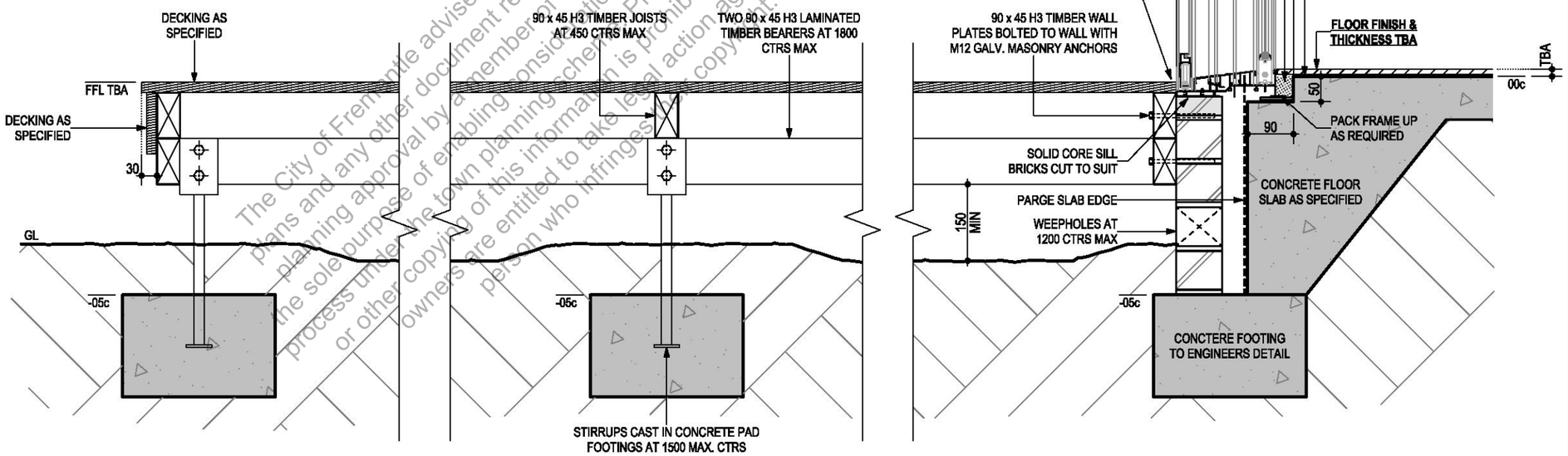

D5 - DECKING DETAIL (STACKER DOOR W/ RECESSED SILL)

SCALE 1:10

CITY OF FREMANTLE
These Revised Plans Form Part of

DA0168/25

14 August 2025

The City of Fremantle advises that the reproduction of these plans and any other document relevant to this application for planning approval by a member of the public is provided for the sole purpose of enabling consideration and discussion as part of the approval process under the town planning scheme. Photo stitching or other copying of this information is prohibited without the copyright owners. Infringement of copyright and/or person who infringes are entitled to take legal action against any

Plunkett Homes

REV	VO #	DRN	DATE	CHK
		RX-JX	21/05/2025	HBH
01	CERTS, PPAV	RX-ED	03/07/2025	HBH
02	PCV 04	HBH	30/07/2025	HBH
03	PCV 05	HBH	12/08/2025	HBH

Sub-contractors to verify all dimensions on site.

ANCILLARY DRAWINGS

THESE DRAWINGS DO NOT FORM PART OF THE CONTRACT DOCUMENTATION

TO BE USED FOR REFERENCE PURPOSES ONLY

ADDRESS:
LOT 491
McCOMBE AVENUE
SAMSON

KOOMBANA BAY E & OE
TYPE: 2c BRICK

MODEL N° KO02 LUXE SPECIFICATION A3

REVISION 03

DATE 12/08/2025

© COPYRIGHT

ANC SHEET N° D4 OF 5

JOB N° 311009

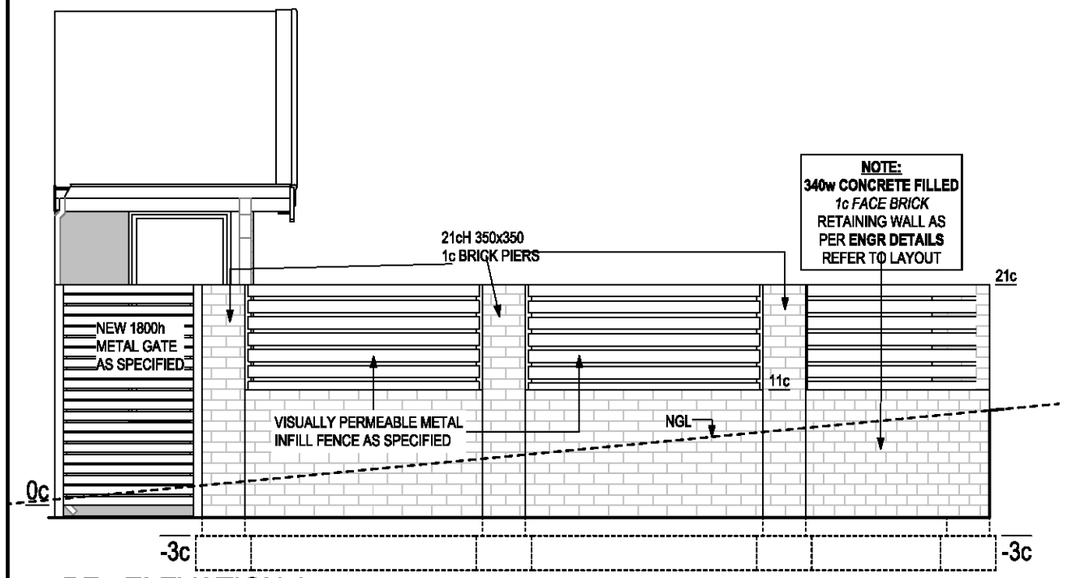

BF - ELEVATION 1

1:50

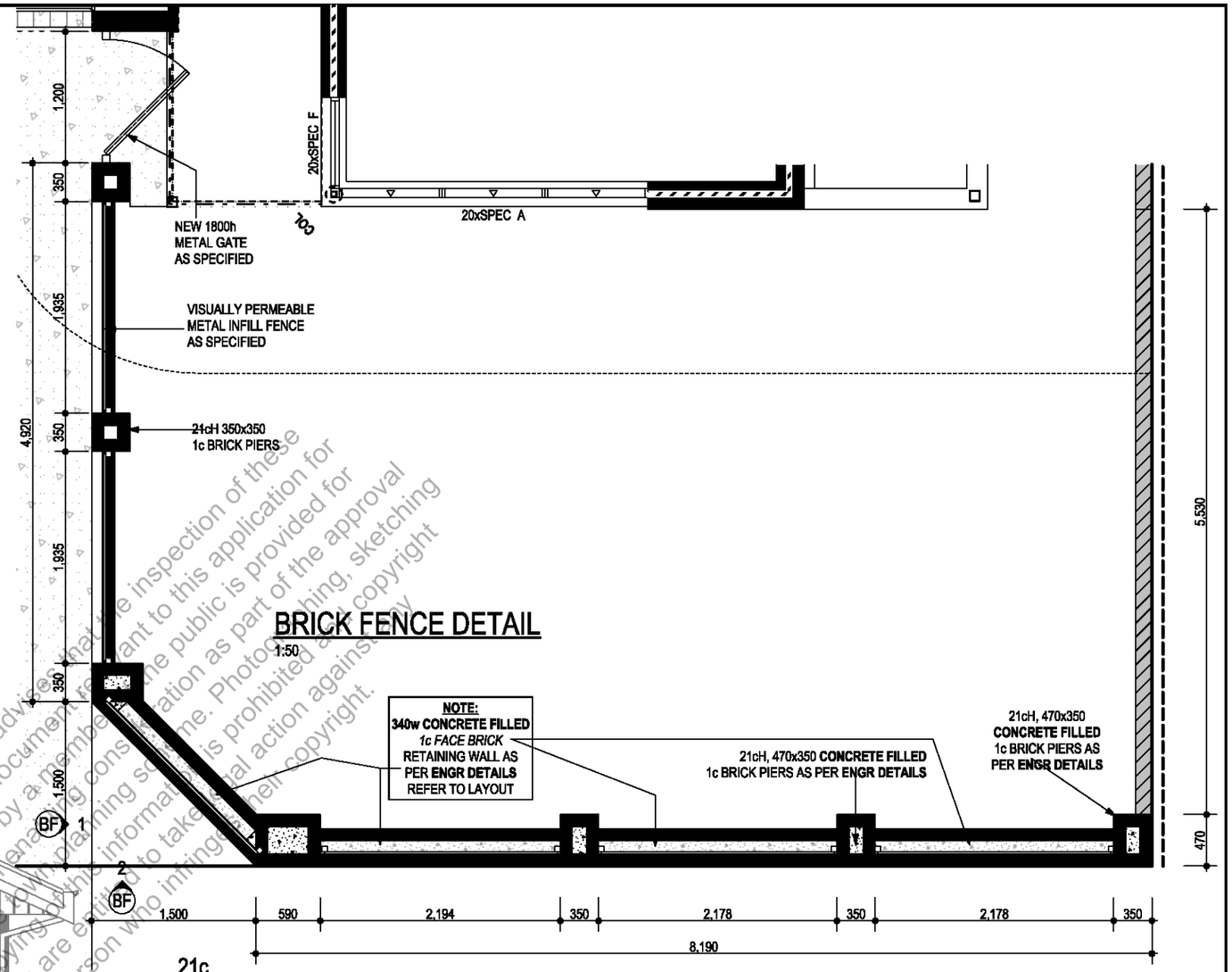

BRICK FENCE DETAIL

1:50

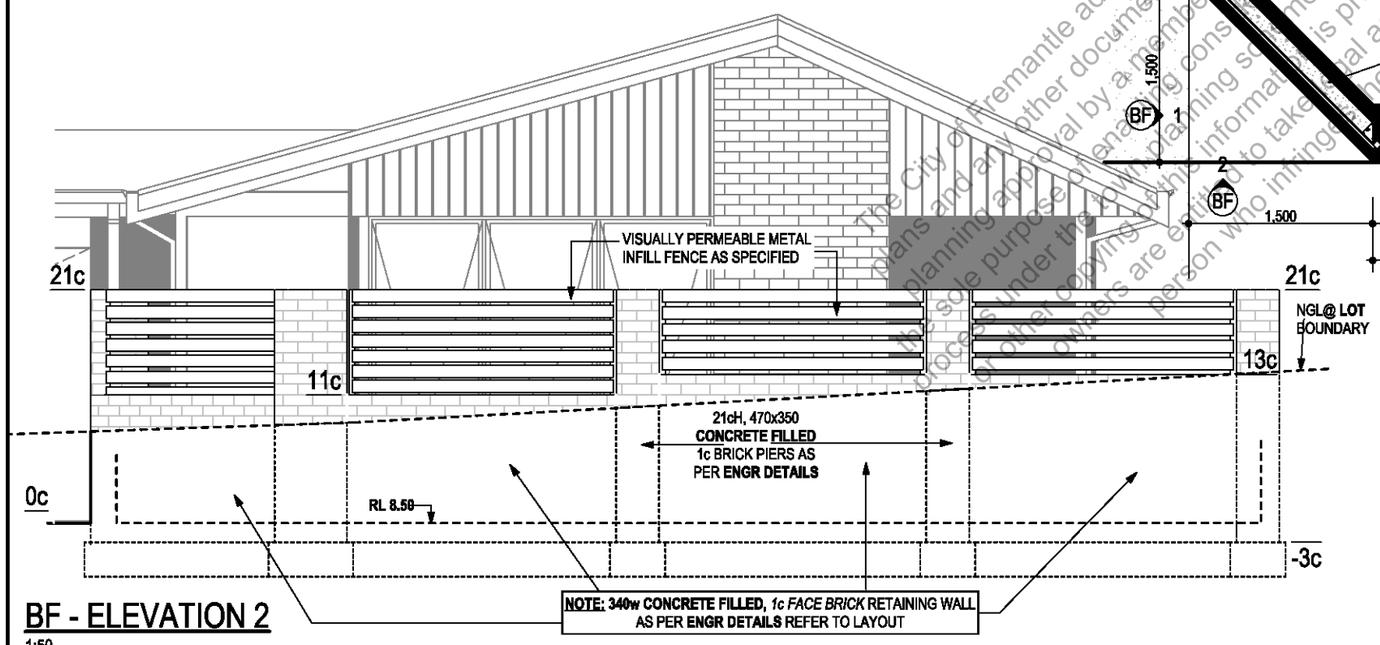

BF - ELEVATION 2

1:50

The City of Fremantle advises that the inspection of these plans and any other document relevant to this application for planning approval by a member of the public is provided for the sole purpose of enabling consideration as part of the approval process under the town planning scheme. Photocopying, sketching or other copying of this information is prohibited and copyright owners are entitled to take legal action against any person who infringes their copyright.

CITY OF FREMANTLE
These Revised Plans Form Part of

DA0168/25

14 August 2025

REV	VO #	DRN	DATE	CHK
		RX-JX	21/05/2025	HBH
01	CERTS, PPAV	RX-ED	03/07/2025	HBH
02	PCV 04	HBH	30/07/2025	HBH
03	PCV 05	HBH	12/08/2025	HBH

Sub-contractors to verify all dimensions on site.

ANCILLARY DRAWINGS

THESE DRAWINGS DO NOT FORM PART OF THE CONTRACT DOCUMENTATION

TO BE USED FOR REFERENCE PURPOSES ONLY

ADDRESS:
LOT 491
McCOMBE AVENUE
SAMSON

KOOMBANA BAY
TYPE: 2c BRICK
E & OE

REVISION 03

MODEL N° KO02
LUXE SPECIFICATION A3

DATE 12/08/2025

© COPYRIGHT

ANC SHEET N° D5 OF 5

JOB N° 311009